evonicfires

BUILT-INS

HALO & DOUBLE SIDED INSTALLATION

DOWNLOAD THE NEW E-SMART PLUS APP FROM THE APPLE APP STORE OR GOOGLE PLAY

GET IT ON Google Play

Download on the App Store

CONTENTS

Disposal....2
Standards....3
Health and safety....4
Side Panel Conversion Chart....6
Side Panel Configuration....7
Installation Steps....8
Front Glass....11
Access Panel....13
Double-Sided Installation....14
Control Options....16
Remote Control....17
App Setup....18
Using the App....22
Heater Overview....23
Theme Overview....24
Timer Overview....25
Account Settings....26
Problems Connecting & Factory Reset....27
Connecting to Amazon Alexa....28
Connecting to Google Assistant....30
Voice Control Commands....32
Lighting Kit Connection....33
Troubleshooting Guide....34
Warranty Information....36

The following materials and components should be disposed of in accordance with the below table.

Metal - Steel or cast iron	Can be taken to a local recycling centre for reuse to reduce waste going to landfill.
Glass & Screens	Can be taken to a local recycling centre for reuse to reduce waste going to landfill.
Vermiculite	Non hazardous material. Vermiculite can be crushed up and used for plant bedding and ash used for composting or disposed of at a local recycling centre for reuse to reduce waste going to landfill.
Electrical components - Fans, heater elements, PCB's, Power pack's, LED's	Dispose at a local recycling centre In accordance with latest WEEE directive.
Log fuel effects	These logs contain refractory ceramic fibre materials which requires disposal in accordance with WEEE legislation.
Natural Wood	Can be taken to a local recycling centre for reuse to reduce waste going to landfill.

EU DIRECTIVES

All Evonic Fires products meet the requirements of the EC Directives.
These directives have been met by compliance with the following standards:

EU 2011-65/EU 2015/863 Restriction of Hazardous Substances.

References to the relevant designated standards used:

EN 55014-1:2006 + A1:2009 + A2:2011 Electromagnetic Compatibility.

EN 55014-2:2015 Electromagnetic Compatibility.

EN 61000-3-2:2014 Electromagnetic Compatibility (EMC). Limits. Limits for Harmonic Current Emissions.

EN 61000-3-3:2013 Electromagnetic Compatibility (EMC). Limits. Limitation of Voltage Changes, Voltage Fluctuations and Flicker.

EN 60335-1:2012 + A11:2014 Household and similar electrical appliances - Safety

EN 60335-2-30:2009+A11:2012 Household and similar electrical appliances. Safety. Particular requirements for room heaters

UKCA STANDARDS

All Evonic Fires products are in conformity with the relevant UK Statutory Instruments (and their amendments).

2016 No. 1101 The Electrical Equipment (Safety) Regulations 2016

2016 No. 1091 The Electromagnetic Compatibility Regulations 2016

2012 No. 3032 The Restriction Of Use Of Certain Hazardous Substances In Electrical And Electronic Equipment Regulations 2012

IMPORTANT INFORMATION AND HEALTH & SAFETY

When using electrical appliances, basic precautions should always be followed to reduce the risk of fire, electric shock, and injury to persons, including the following:

- Read all of the instructions carefully before using the appliance, only use this appliance as described in this manual. Any other use not recommended by the manufacturer may cause injury to persons, or damage to the appliance.
- Remove all packaging and dispose of it at an appropriate recycling facility.
- When transporting or storing the appliance and power lead, keep in a dry place, away from excessive vibration and store so as to avoid damage.
- This fireplace is hot when in use. To avoid burns, do not let bare skin touch hot surfaces. The trim around the heater outlet becomes hot during heater operation. DANGER: High temperatures may be generated under certain abnormal conditions.
- Do not install this appliance immediately in front of a fixed socket outlet.
- Do not install this appliance in the immediate surroundings of a bath, shower, swimming pool or any other area where the appliance could come into contact with water or humidity, e.g. a bathroom.
- Do not use in areas where gasoline, paint, or any flammable liquids are used or stored.
- This appliance is only suitable for indoor use, do not use outdoors.
- Do not cover the appliance, or let the air inlet/outlet to be obstructed in any way as it may overheat.
- Keep the power lead away from hot surfaces and the heater outlet. Do not route the power lead in front of the appliance, or under any carpets or rugs. Do not allow the power lead to be coiled up once installed, as this can cause overheating.
- This appliance must be firmly fixed to or recessed into, a flat internal wall.
- A maintenance hatch must be installed into the surrounding installation to allow future access.
- Always use a certified electrician should new circuits or outlets be required. And always use properly grounded, fused and polarised outlets.
- Where the power lead passes through any masonry wall, stone surround etc. ensure that suitable rubber bushes are fitted at any possible wear points.
- If the power lead is damaged do not use the appliance until it has been replaced.
- Do not use any external switching device, timers, or extension leads. Do not connect the appliance to a circuit that is frequently switched on and off by the utility.
- In the event of a malfunction, switch off the appliance, and disconnect it from the mains power supply. Have the appliance inspected by a certified electrician before reusing.
- Do not use the appliance if it is damaged. In the event of any damage to the appliance, please contact the retailer from whom the appliance was purchased.
- Any repairs must only be performed by a certified electrician.
- Extreme caution is necessary when any heater is used by, located near children or people of reduced mobility, and whenever the unit is left operating and unattended.
- Young children should be supervised to ensure that they do not play with the appliance.
- Disconnect from the power supply before performing any cleaning, maintenance or relocation of the unit. Do not use steam cleaners, or aerosols near the appliance.
- Do not burn wood or anything else in this appliance.
- Do not strike the glass. The glass used is toughened safety glass, if broken it will shatter into small chunks which are less likely to cause injury.
- Do not drill or screw any new holes into the appliance.

SIDE PANEL CONVERSION CHART

1-SIDED

Appliance arrives in 1-sided configuration.

↓

Remove plaster kit from both side panels.

↓

1-Sided appliance is now ready to install.

2-SIDED

Appliance arrives in 1-sided configuration.

↓

Identify which side needs to be removed to achieve desired installation.

↓

Remove appropriate side panel **(Fig 1)**.

↓

Remove plaster kit from detached panel **(Fig 1)**.

↓

Re-attach plaster kit to side of appliance **(Fig 2)**.

↓

2-Sided appliance is now ready to install.

3-SIDED

Appliance arrives in 1-sided configuration.

↓

Remove both side panels **(Fig 1)**.

↓

Remove both plaster kits from side panels **(Fig 1)**.

↓

Re-attach both plaster kits to side of appliance **(Fig 2)**.

↓

3-Sided appliance is now ready to install.

REMOVING THE SIDE PANELS / CONVERTING TO **GF2** or **GF3**

All our built-in appliances are shipped as 1 box models, with the side panels attached and the glass installed to the **GF3** configuration. Please note: **This does not apply to double-sided models.** To convert to **GF2** or **GF3** configurations, you simply need to remove the side panel(s) and re-attach the plaster kit.

1. Unscrew and remove the side panel(s) from the side/s of the appliance. Then remove the plaster kit from the side panel.

2. Re-attach the plaster kit(s) using the same fixing points.

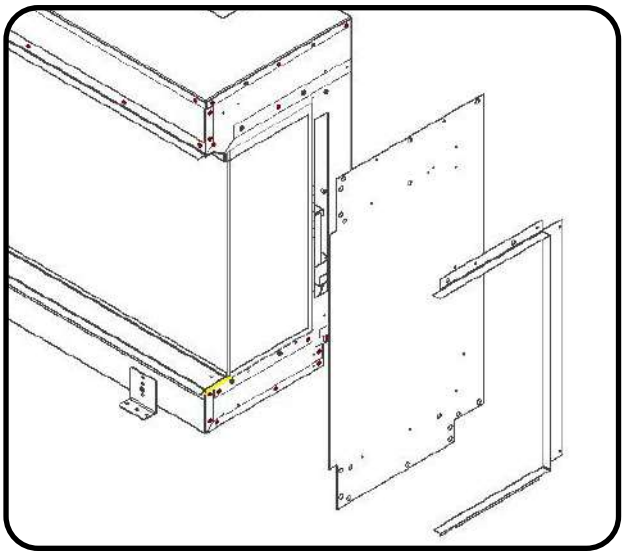

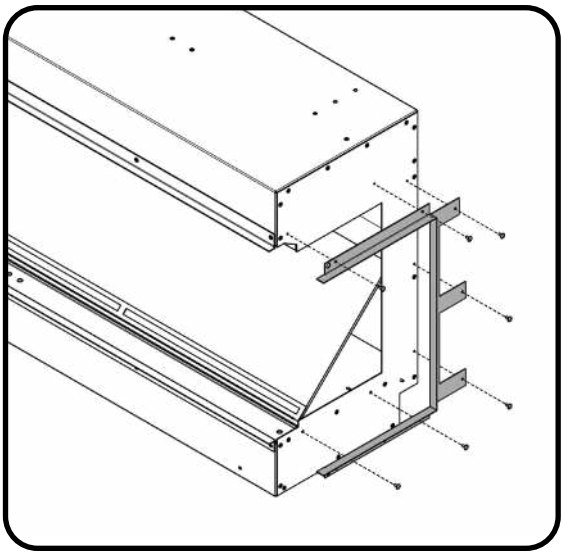

GF CONFIGURATION

Glass Fronted
A single glass panel at the front of the appliance.

GF2 CONFIGURATION

A glass panel at the front and one side piece of glass. The glass can be either side.

GF3 CONFIGURATION

The standard configuration.
A glass panel at the front and both side pieces of glass.

CHECKS BEFORE INSTALLATION - *ALL MODELS*

INSTALLATION DO'S AND DONT'S

Before installing the appliance please read and take into account the following important requirements;

- Consult a qualified professional to check the structure of the installation site.
- These appliances have been designed to be installed into either a stud and plasterboard wall, or an existing chimney breast. (Please note that Open, GF2, and GF3 models are not suitable for existing chimney breast installations.)
- If installing into an existing chimney, make sure to adequately block off the flue.
- We recommend all appliances are provided extra support due to their size and weight, as such they are not suitable for 'floating' installations.
- The appliance must never be installed in front of an electrical socket.
- The appliance must not be installed anywhere that it may come into contact with water, i.e. a bathroom.
- Do not wet plaster directly onto the appliance.

AIR CLEARANCE

When installing all built-in models, a minimum internal air clearance gap of 50mm is required below the appliance to allow air circulation and prevent overheating. CK Fires will not be held liable for any faults arising from incorrect air clearance being adhered to during installation.

CHECKS BEFORE INSTALLATION

We recommend turning on the appliance before installation, connect the appliance to a power source using the provided electrical lead, and press the right side of the **ON/OFF** switch. **Please note: The appliance will take approximately 45 seconds to power up.**

Once this check has been completed, switch the fireplace OFF, remove the electrical lead from the wall and continue with the installation.

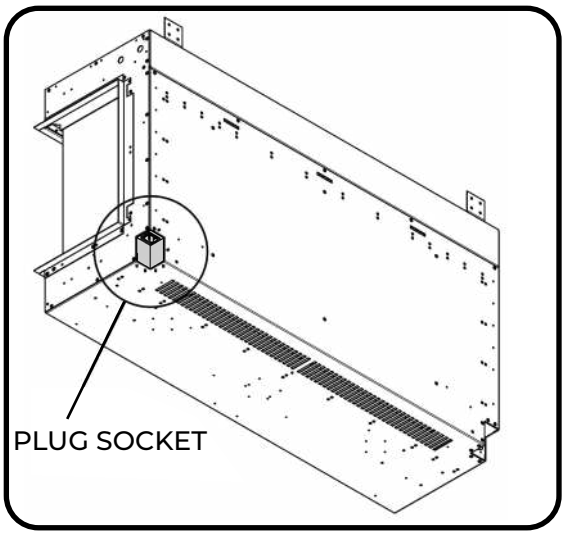

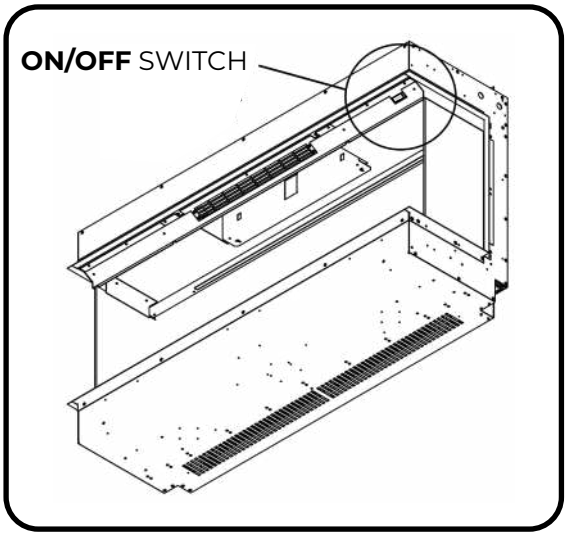

INSTALLATION METHOD - *BUILDING A FRAME*

1

The appliance will come with 4 transit feet attached to the bottom - 2 at the front and 2 at the back **(Fig 1)**. Remove the transit feet, then, screw in the IEC clip on the back right using the fixings provided **(Fig 2)**.

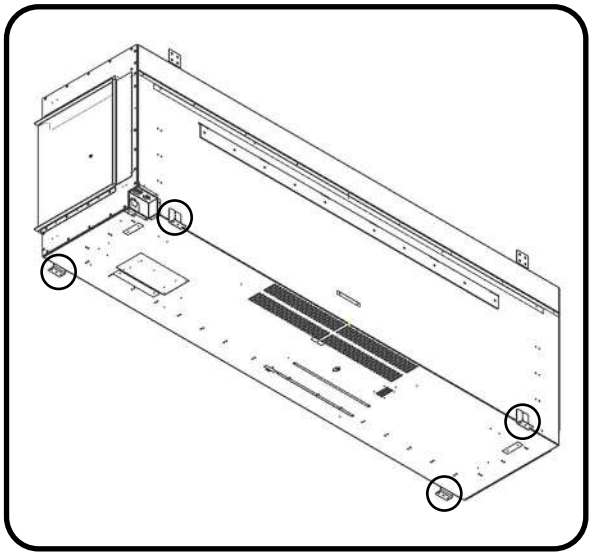

Fig 1.

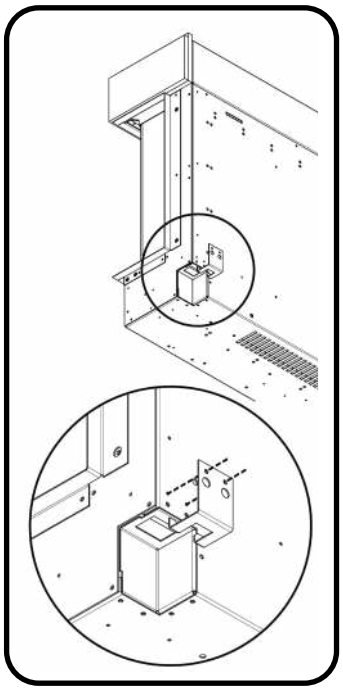

Fig 2.

2

Determine the required height you want to build your base and place your fire on top. Mark out where you will need to drill into the wall and secure the fire using the brackets.

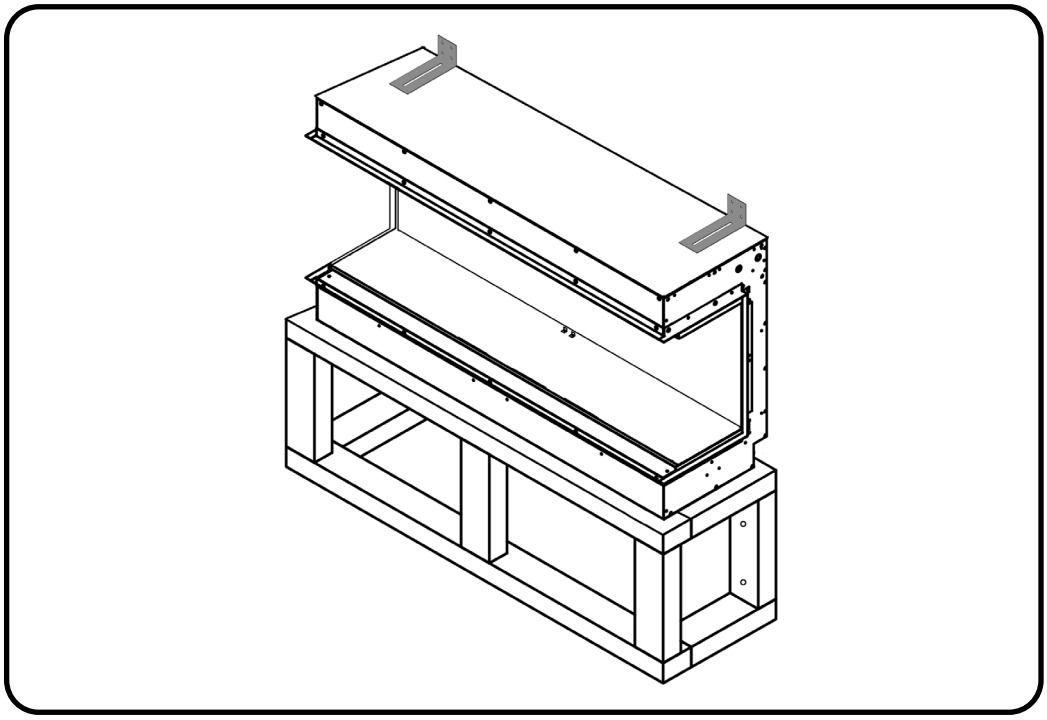

3

Screw the two top mounted brackets to the wall **(Fig 4)**. We supply masonry fixings for screwing into brick, however if you are screwing into timber, plasterboard, or another material, fixings will need to be sourced by the customer/installer. You can now construct your stud wall/s around the appliance in the design of your choosing.

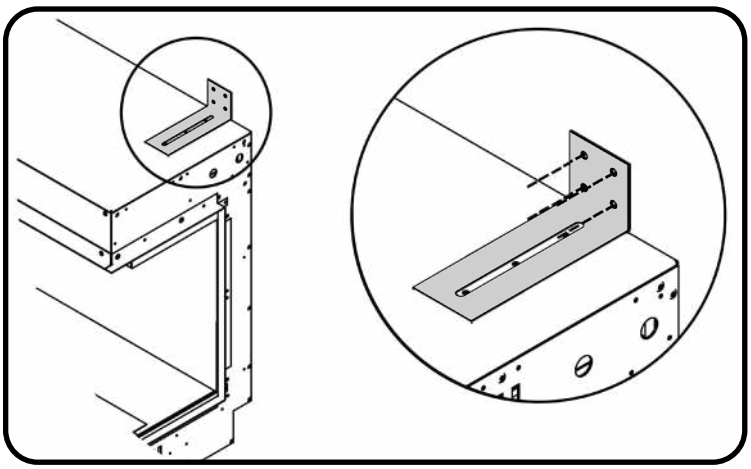

Fig 4.

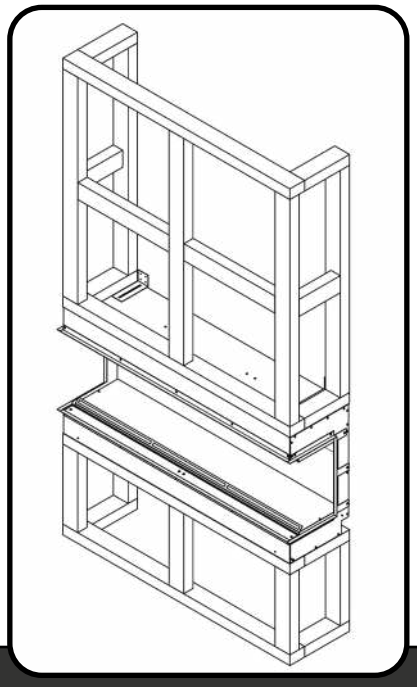

INSTALLATION TIPS

- When constructing the stud work for the appliance, remember that the vents on the underside of the appliance need a minimum of 2" clearance beneath them. See page 8 for further details.
- Ensure that the appliance **does not support the weight of the stud work.** Secure your frame to the wall using the appropriate fixings (Not supplied).
- Do not use silicones, adhesives, or wet plaster to seal in the appliance.
- Before plaster boarding your stud work, it is strongly **recommended that you create a maintenance hatch that allows access to where the power lead connects with the fireplace**. This is usually on the right hand side of the appliance.

4

Your plasterboard can now line up with the plaster kits on the edge of the appliance (Fig 5). **Please note:** the depth of the paster kit edge is **15mm.**

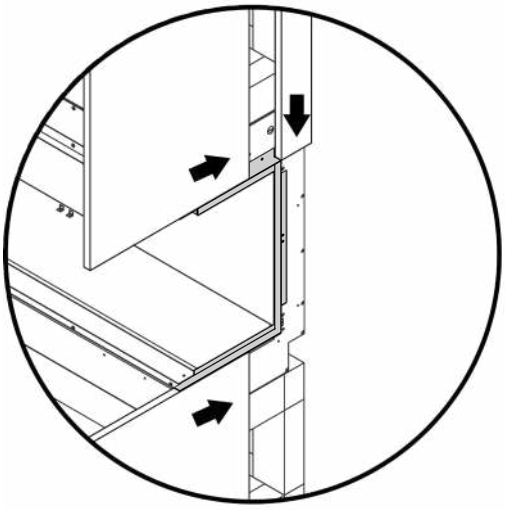

Fig 5.

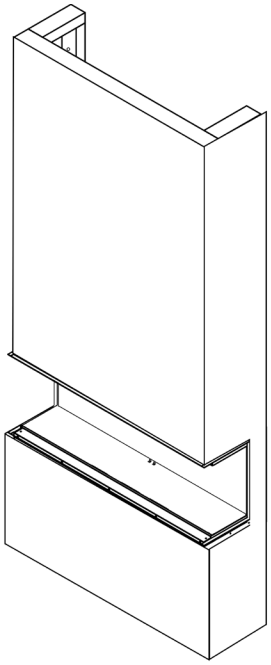

GLASS INSTALLATION - *FRONT GLASS*

1

First remove the bottom glass retainer bar by simply lifting out of place **(Fig 1)**. Then you can remove the top retainer bar by unscrewing the fixings **(Fig 2)**. **Please note: Support must always be provided to the glass when removing the top retainer bar to prevent it falling forward and causing damage or injury.**

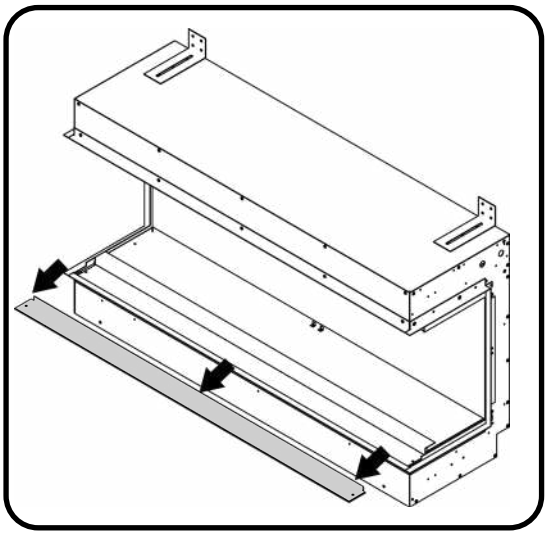

Fig 1.

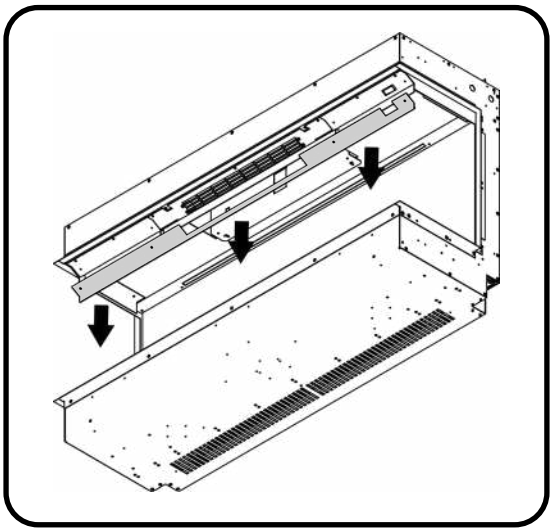

Fig 2.

2

Apply the suction cup to the glass and position the bottom edge of the glass first, then pivot the glass into the appliance. If not using a suction cup, carefully hold the glass on both sides and follow the same process. 2 people may be required for this to ensure the glass is carefully supported at all times **(Fig 2)**.

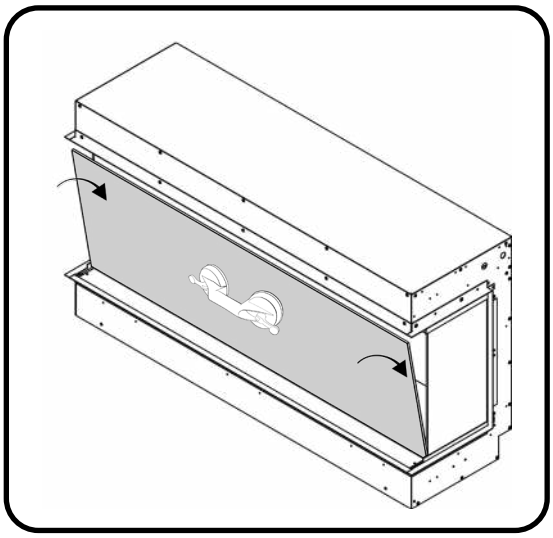

Fig 3.

3

Then replace the top glass retainer bar and screw into place **(Fig 4)**, and finally, replace the bottom glass retainer by slotting into place **(Fig 5).**

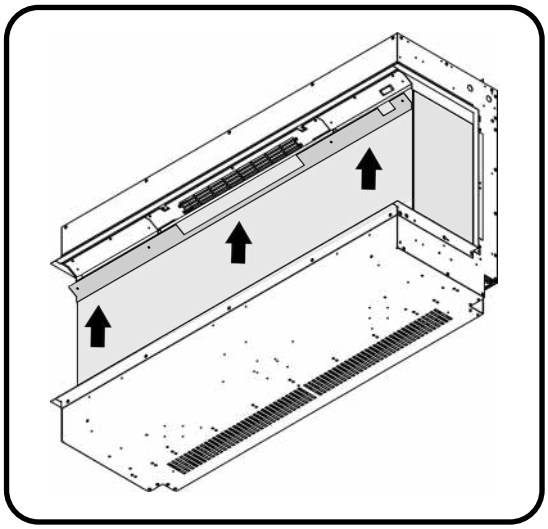

Fig 4.

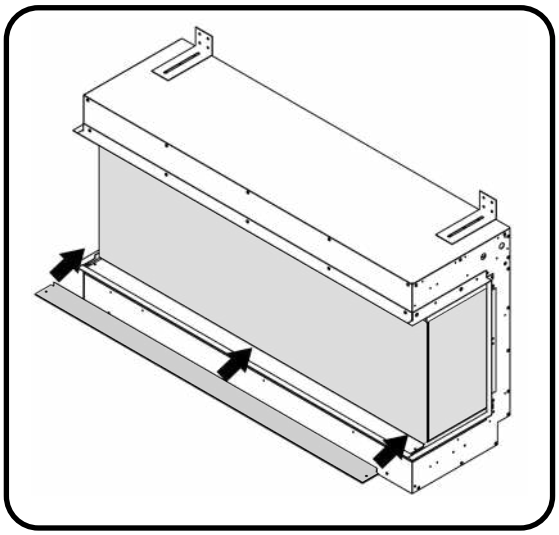

Fig 5.

ACCESS PANEL

The inclusion of a small access panel is optional, but it is highly recommended as it allows for access to the fireplace's power cord during servicing or fault-finding. The access panel can be any size, however to keep it discreet we advise around **15cm X 15cm**. The rest of the electrical componentry can be accessed from the front of the fireplace at any time.

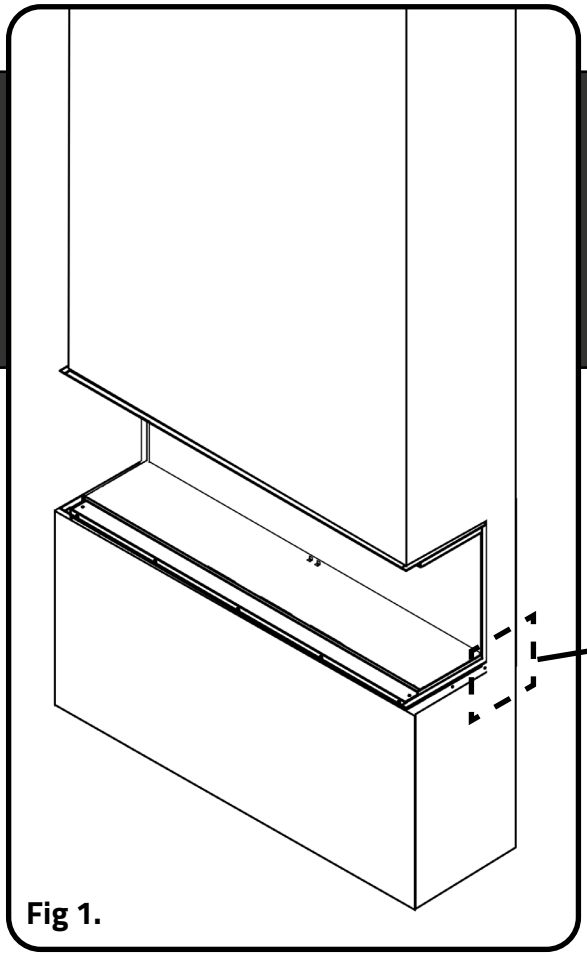

Fig 1.

PLEASE NOTE:

If you do decide to include an access panel, the optimum place to position this is on the right hand side of the chimney breast, where the power cord plugs into the appliance. This allows easy access to the power cord in the event of any power supply issues.

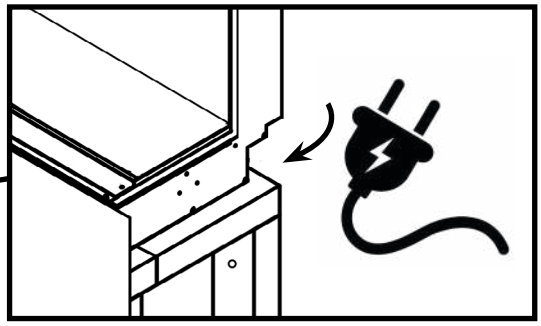

Fig 1 indicates where the power cord will connect to the appliance in relation to a standard chimney breast installation. You can use this as a guide to create your access panel.

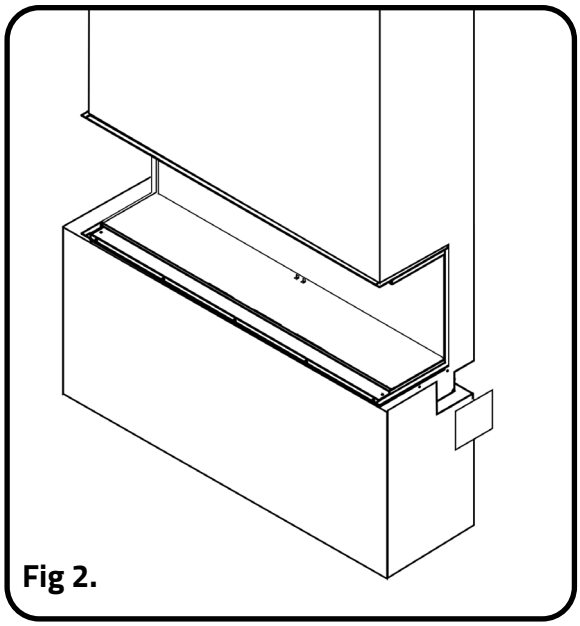

Fig 2.

Fig 2 indicates where the power cord will connect to the appliance. You can use this as a guide to create your access panel.

DOUBLE-SIDED INSTALLATION

Remove the two bottom mounted transit brackets from both sides. You will not need these for the installation.

1

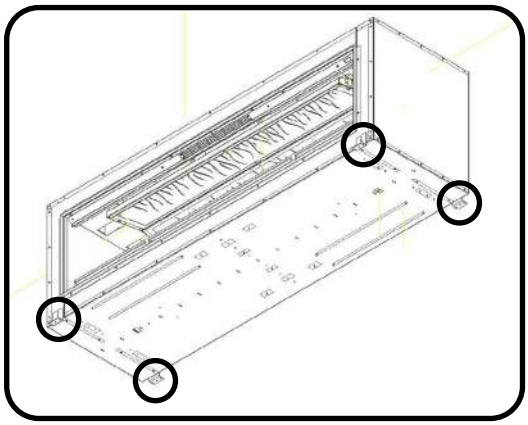

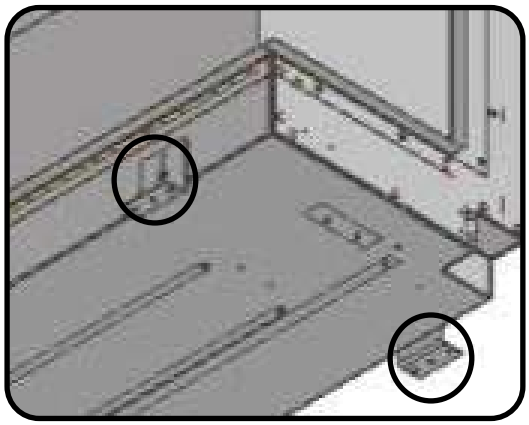

Determine the finished height and position that you want the appliance to be located. Build your base support taking into consideration the **50mm ventilation gap under the appliance required on 810DS, 1030DS & 1500DS models**. Then place the appliance onto your constructed base and check that it is well supported.

Once you have established this, you can add the top section of your installation. To ensure the weight of your top section is not solely resting on the appliance, we suggest securing it to the ceiling to add extra support.

2

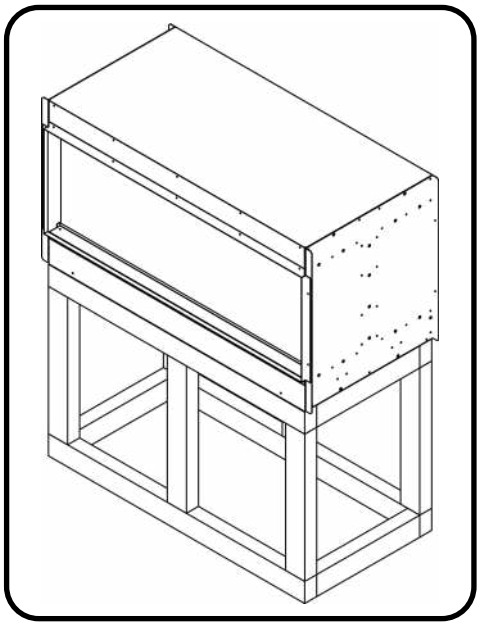

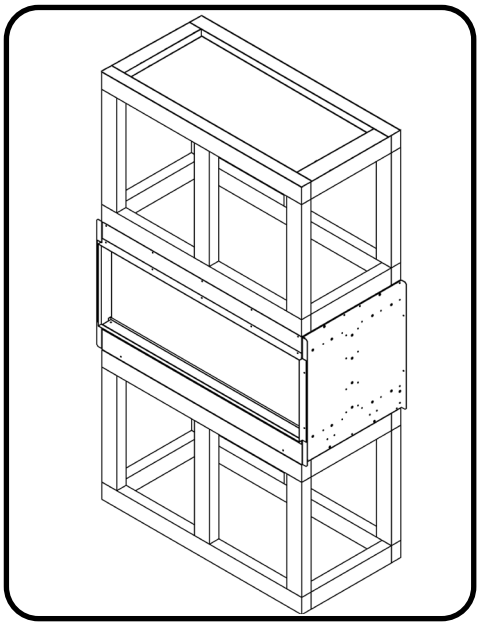

3

You can now begin to plasterboard your studwork.

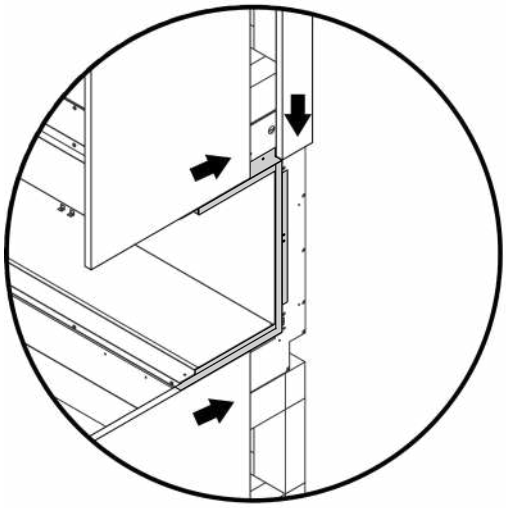

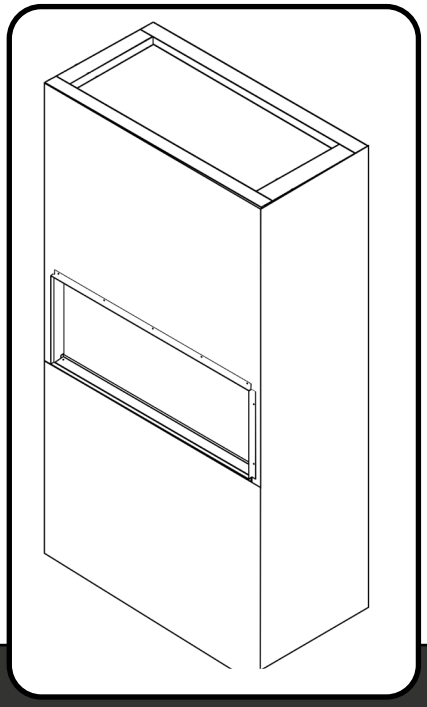

INSTALLATION DO'S AND DONT'S

- When constructing the stud work for **e810DS** and **e1030DS models**, remember that the vents on the underside of the appliance need a minimum of **50mm clearance beneath them.**
- Ensure that the appliance **isn't supporting the weight of the stud work.**
- Do not use silicones, adhesives, or wet plaster to seal in the appliance.
- Before plaster boarding your stud work, it is strongly **recommended that you create a maintenance hatch that allows access to where the power lead connects with the fire**. This is usually in the middle of the left or right side of the appliance, depending on which side you are looking from.

OPERATION

There are two ways to control all the features of your Evonic appliance - remote or App control.

Our remote handset comes automatically paired and ready to operate straight out of the box. If you choose to control your appliance via the E-smart Cloud App your internet router and smart device should meet the following minimum requirements -

Wi-Fi Router

- Compatible with IEEE 802.11n/g/b
- WPA2 encryption
- Radio frequency: 2.4GHz band
- Wireless auto channel: auto search for wireless LAN radio channel free of interference
- Support for the User Datagram Protocol (UDP)
- The minimum distance from your internet router to the fireplace should be 70cm

Smart Device

- Minimum device requirements IOS 8.0 or Android 10

REMOTE CONTROL

1. Remote Control/Handset Pairing Process: After turning on the fireplace with the rocker switch, there is a 60-second pairing window. This window begins after a beep, which occurs 15-20 seconds after the fireplace is switched on. After the first beep, press the '**Heater ON**' button for 5 seconds until you hear a second beep. The pairing is now complete.

Please Note:

The speed control feature is not available on double-sided models

2. Factory Reset: To reset, press and hold the 'Change Log Colour' button until you hear a beep, then press and hold the 'Change Fuel Bed Effect' button until it beeps again. The reset process is complete.

3. Speed Control: To adjust the speed, push the speed joystick up/down until desired speed has been reached.

4. Log Colour Brightness Logic:
• (-) Button: There are 5 brightness levels: 100%, 75%, 50%, 25%, and 0%. Press the (-) button to decrease brightness by 25% each time, down to 0%.
• (+) Button: There are 5 brightness levels: 100%, 75%, 50%, 25%, and 0%. Press the (+) button to increase brightness by 25% each time, up to 100%.

5. Fuel Bed Brightness Logic:
• (-) Button: There are 5 brightness levels: 100%, 75%, 50%, 25%, and 0%. Press the (-) button to decrease brightness by 25% each time, down to 0%.
• (+) Button: There are 5 brightness levels: 100%, 75%, 50%, 25%, and 0%. Press the (+) button to increase brightness by 25% each time, up to 100%.

6. Flame Effect Logic:
• Pressing the button advances to the next animation your model offers. This is not applicable on single colour models.

APP SETUP - CREATE YOUR ACCOUNT

1

Download on the App Store

GET IT ON Google Play

Navigate to the **Google Play Store** or **Apple App Store** on your device.

2

In the search bar, type **E-Smart plus** and download the application to your device.

3

Navigate to the **E-Smart Plus** App on your device and open it.

APP SETUP - ACCOUNT REGISTRATION

1

Launch the e-smart plus app and this screen will appear. You need to create an account before you begin to link your fireplace. Press the '**Sign Up**' button to continue.

2

Enter your email address and create a password. Click '**Agree to Privacy Policy**', then press '**Registration**' to confirm. Please ensure your passwords match in both fields.

3

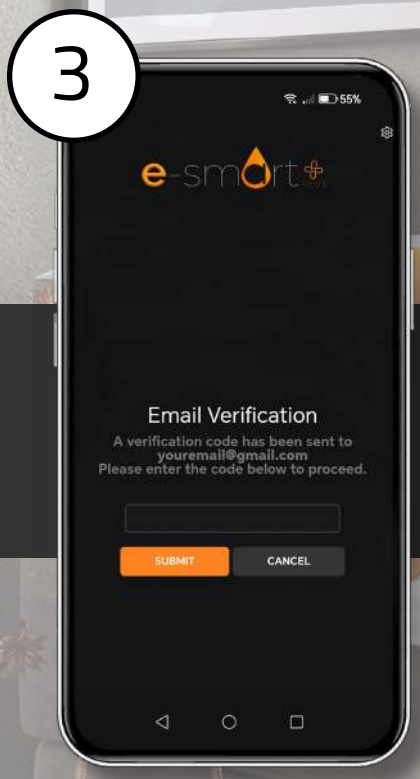

A verification code will be sent to your chosen email address. Enter this code into the email verification box in the app and press submit. Your account should now be activated.

APP SETUP - CONNECT YOUR FIREPLACE

1

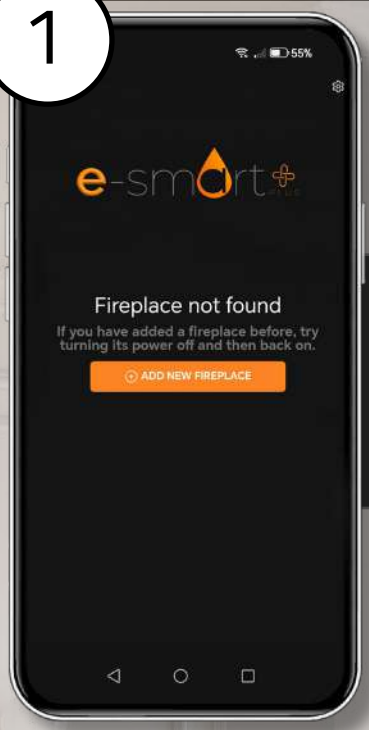

Ensure your fire is **ON** and your devices bluetooth is turned **ON**. Press the '**Add New Fireplace**' button.

2

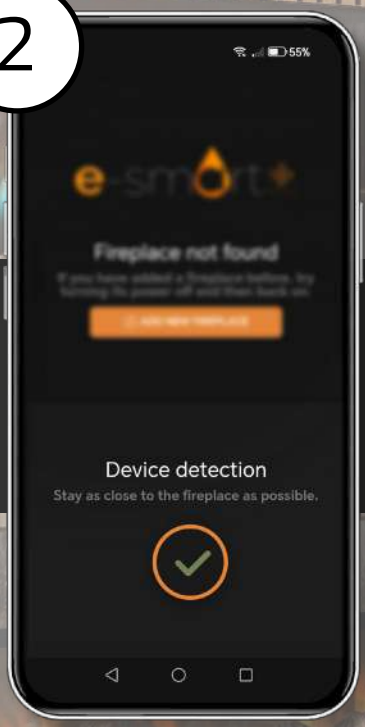

Your device will now look for your fireplace using Bluetooth. Once it has been found, **a green tick will be displayed**.

3

The next step is to connect to your router. A drop down menu will appear where you can **select your preffered network**.

4

Once you have selected your network, **enter the WiFi password**.

5

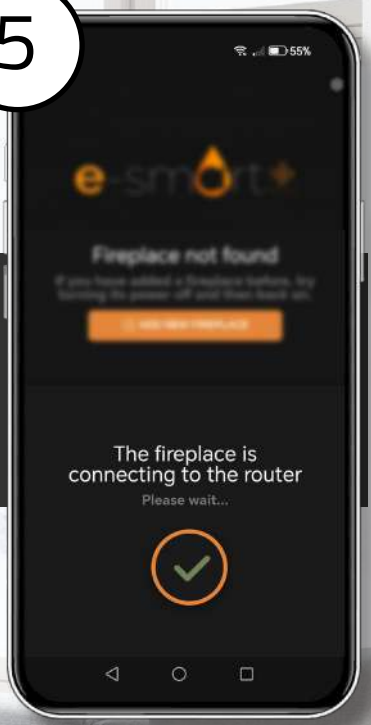

The connection process will now begin and you will see this screen. Please note: This process may take **30-60** seconds. During the connection, your fireplace will turn **OFF**, then back **ON**.

6

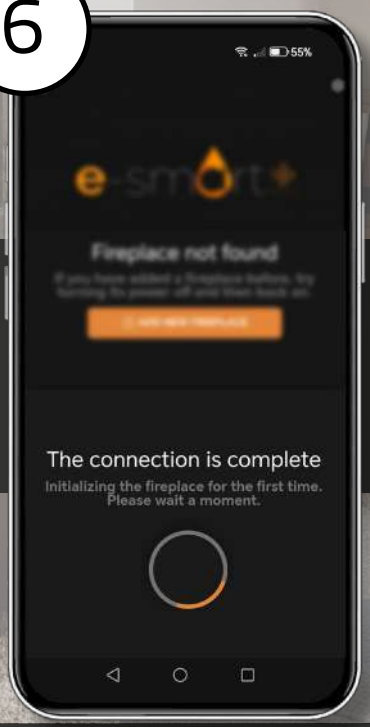

When this process is finalising, you will see this screen. You will then be automatically directed to the homepage of the e-smart + App where you can control your fireplace.

USING THE E-SMART APP

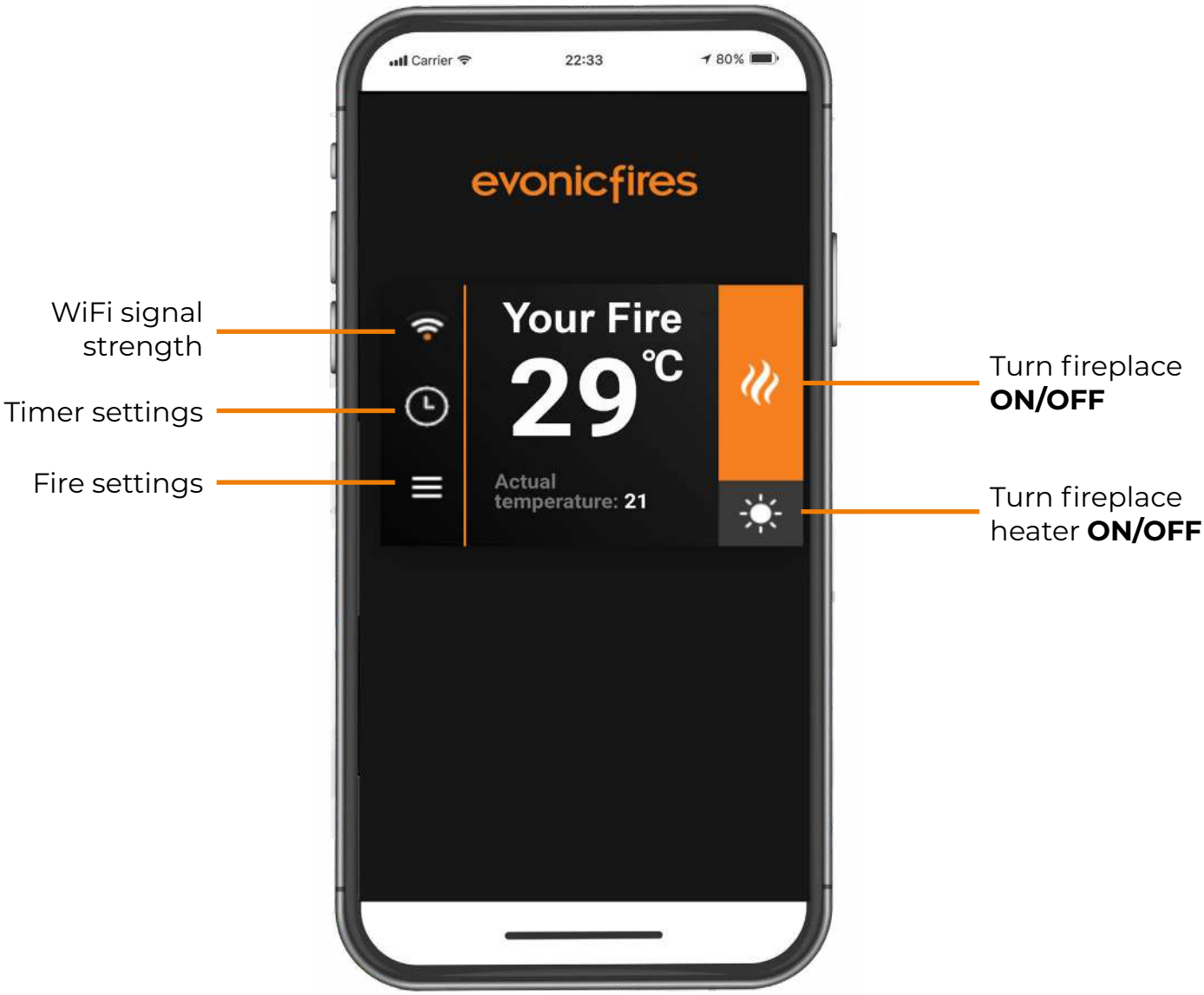

SCREEN NAVIGATION

On the home page of the E-smart Cloud App you can see the name of your fireplace, the chosen temperature, and the actual temperature. On the right side you can turn the lights in the fireplace on and off, and also turn the heater on and off. On the left side you can access the fireplaces settings and view your WiFi signal strength.

To enter the **Heater Overview screen**, press the middle of the home screen where the temperature is displayed.

HEATER OVERVIEW

SCREEN NAVIGATION

The Heater overview screen allows you to access all the key features of your fireplace.

From this page you can turn your heater and fireplace **ON/OFF** and control temperature settings.

At the bottom of this screen, you can also access your **theme settings** and **timer settings**.

THEME OVERVIEW

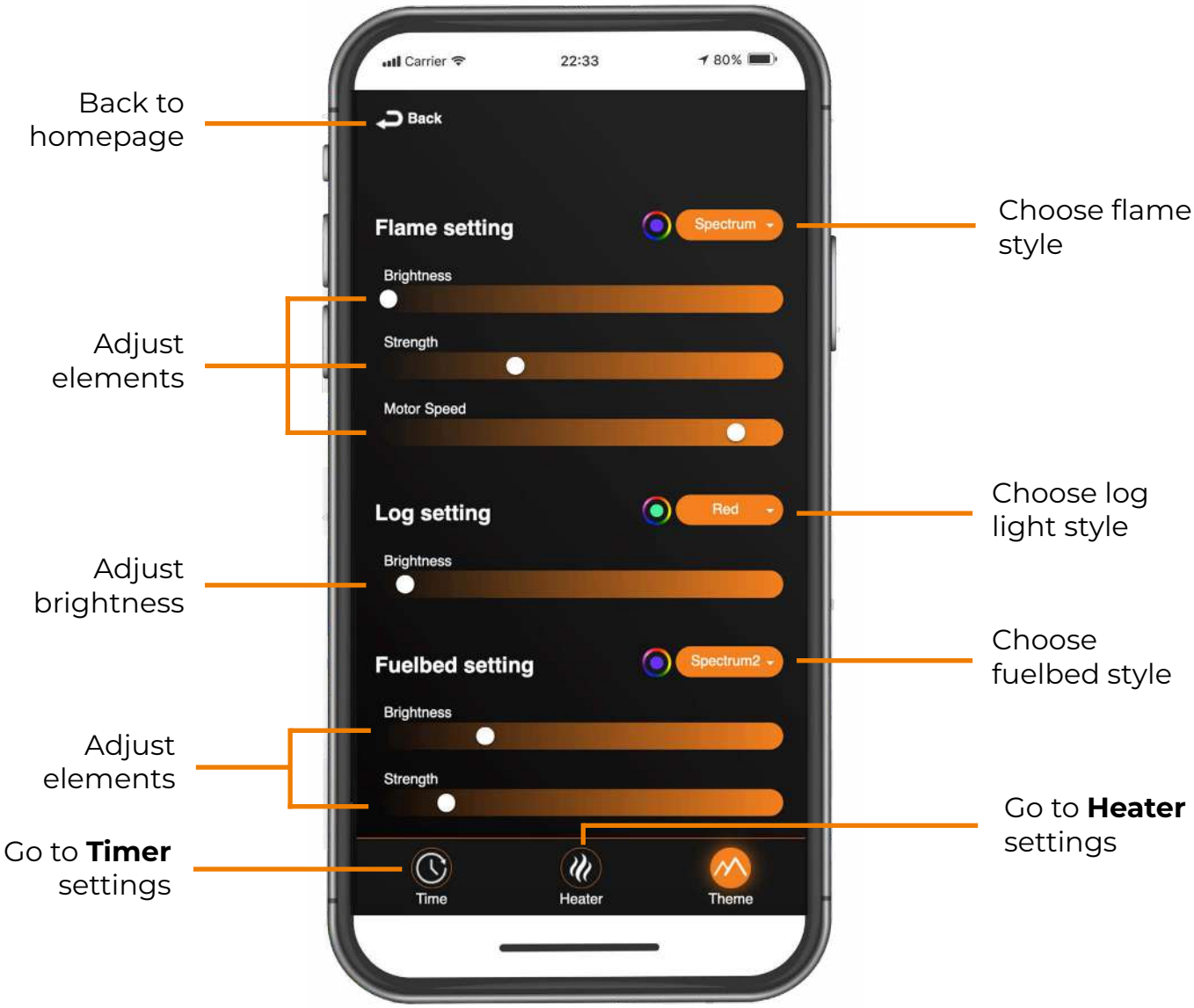

SCREEN NAVIGATION

The theme overview page is where you can control all of the color options your fireplace has.

From here, you can adjust Flame, Log & Fuelbed styles from the drop-down menu or customize the color by pressing the color circle icon.

Single press the color icon to bring up a spectrum of available colors.

You can also adjust various elements of the flame picture with the swipe gauges to achieve your perfect flame.

At the bottom of this screen, you can also access your **heater settings** and **timer settings**.

TIMER OVERVIEW

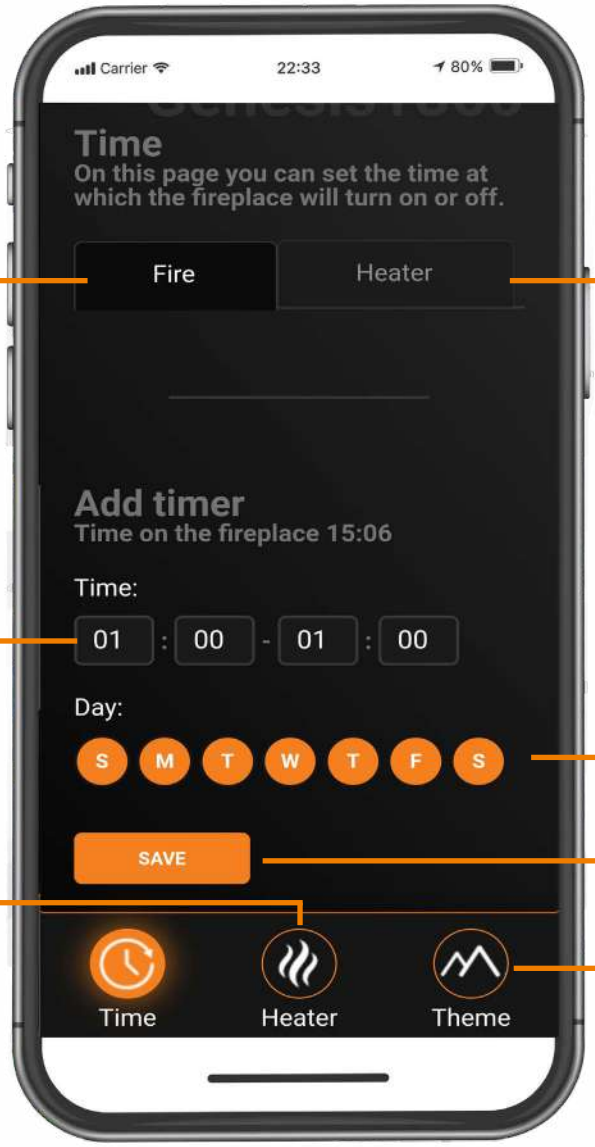

Fire timer

Heater timer

Set desired time

Set desired day

Save to add timer

Go to **Heater** settings

Go to **Theme** settings

SCREEN NAVIGATION

To add a new timer, start by pressing the + icon

To set up a timer, first select **fire** or **heater.** Under **time**, choose your desired start and end time using the 24-hour time format. You can then select which days you want this timer to be applicable on. Press save and your new timer has been created.

At the bottom of this screen, you can also access your **theme settings** and **heater settings**.

ACCOUNT SETTINGS

To access the account settings in the e-smart + App, **press the settings icon** in the top right corner of the App.

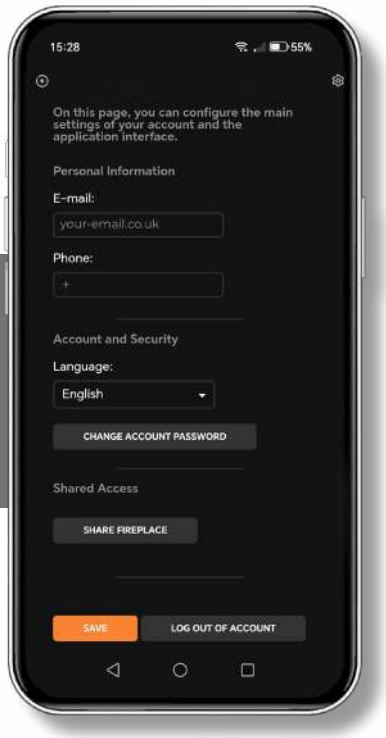

The settings panel will then be shown, where you can **update your email**, add your **phone number for backup recovery**, **select a language** and **share access to your fireplace**. You can also **log out** from this screen

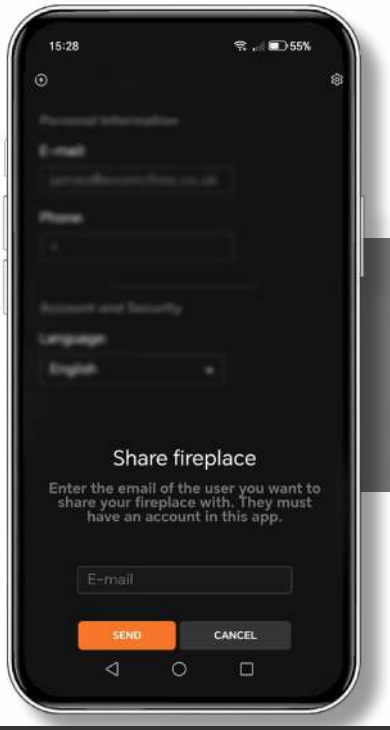

With our new **Shared Access feature**, you can send members of your household an email invite to create an account. Once this is done, they will have full access to the fireplace via the App without having to go through the initial setup phase.

PROBLEMS CONNECTING

If you are having problems connecting your fireplace with your device and router please try the following steps to fix the issue.

· *Switch fireplace OFF*

· *Switch wi-fi router OFF*

· *Switch fireplace back ON (Keeping router OFF)*

· *Open the wi-fi settings on your device - find and select your product / fireplace*

· *Open the e-smart App on your device and select the settings icon*

· *In 'Device Name', rename your fireplace (Be sure not to use numbers or spaces when renaming your fireplace)*

· *In the Settings menu scroll down to the IoT Registration and check that your email and password are correct. You can click the eye icon to help you see any mistakes. Press save.*

· *Check you have selected the correct network and the wi-fi password entered is correct, you can click the eye icon to help you see any mistakes.*

· *Make sure 'Static IP' is NOT selected (unless advised by an IT professional). Press save and connect.*

· *Wait 2 minutes for the fireplace to try and re-connect. Once this process is finished the App will show the home screen (Page 20).*

· *Switch your fireplace OFF.*

· *Switch your wi-fi router back ON.*

· *Switch your fireplace back ON.*

If your wi-fi signal is weak, the App will show you a red warning message located on the home screen.

If your problems persist after attempting to re-connect, please contact our service department.

RESETTING YOUR FIREPLACE

If you have entered a wrong email or password during the set-up process, then you may need to reset your fireplace to factory settings. This can only be done on your remote control.

1. Hold down **'Change log colour'** button until you hear an audible beep.

2. Hold down **'Change ember effect'** button until your hear an audible beep.

Your fire has now been reset to factory settings.

CONNECTING TO AMAZON ALEXA

1

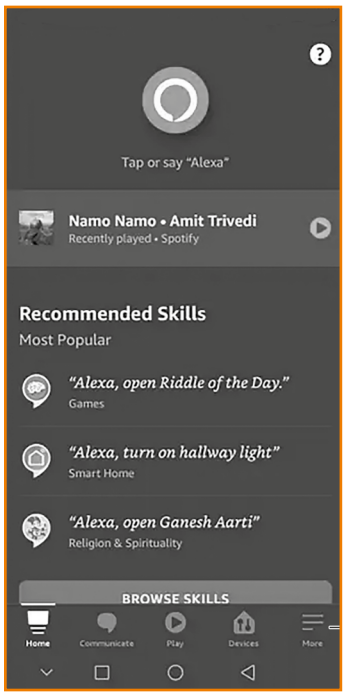

Once your fire is installed, and switched on, download and open the Amazon Alexa app. Once open single press More in the bottom right hand corner.

2

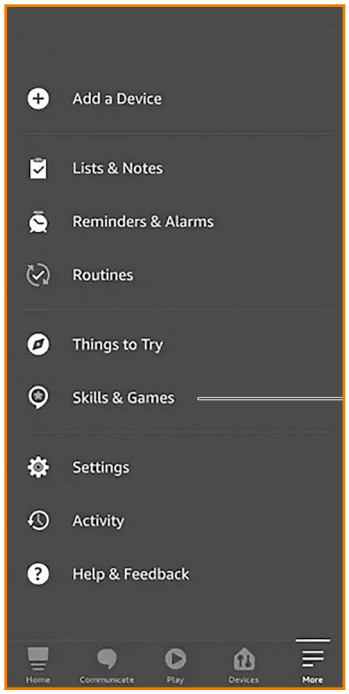

Single press Skills & Games on the pop up list.

3

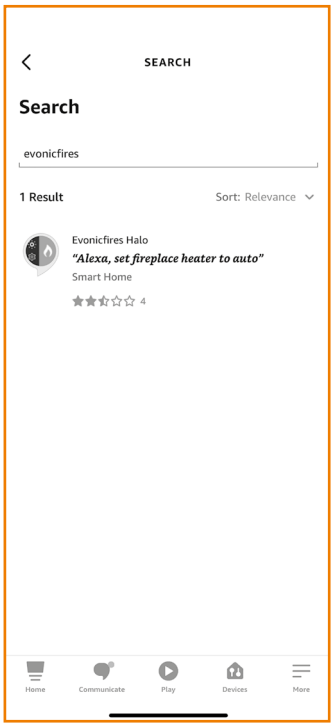

Single press Search and type in evonicfires. Select the Evonicfires Halo skill icon to open.

4

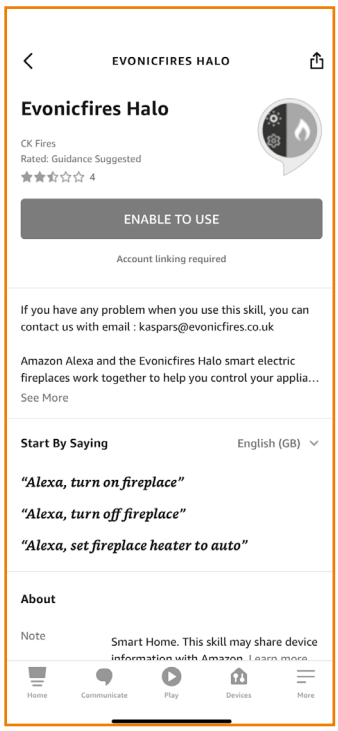

Now on the Evonicfires Halo skill page you can single press the Enable to Use button to go to the log in page.

5

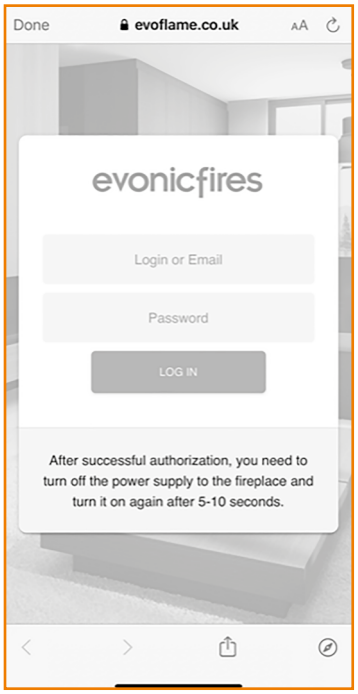

Enter the log in details that you previously entered in the app set up process, and single press Log In.

6

After a few moments your account will be linked, once this is done you can single press Close.

7

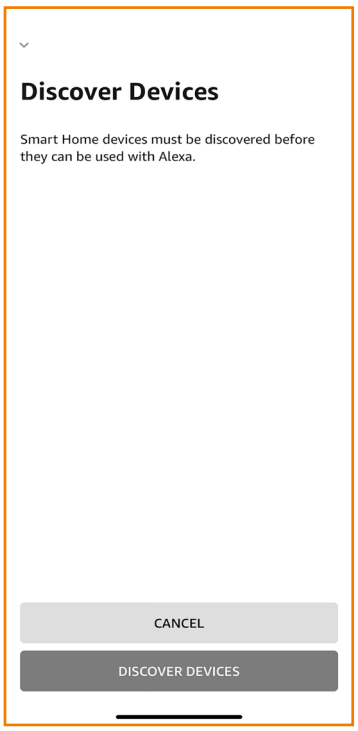

Single press Discover Devices to search for your fire.

8

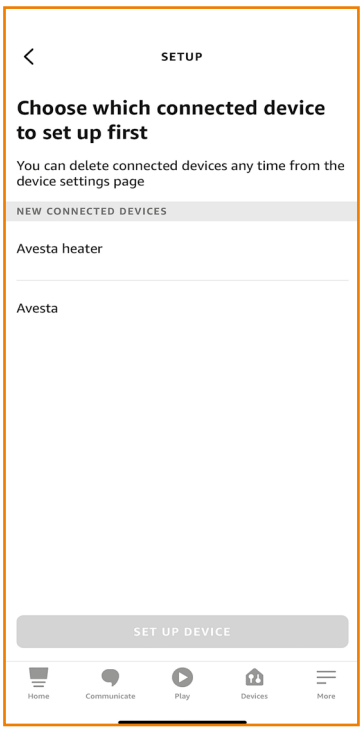

Your fire will show up as two devices, allowing you to programme the heater separately to the effects. Single press the second option, and Set up Device.

CONNECTING TO GOOGLE HOME

1

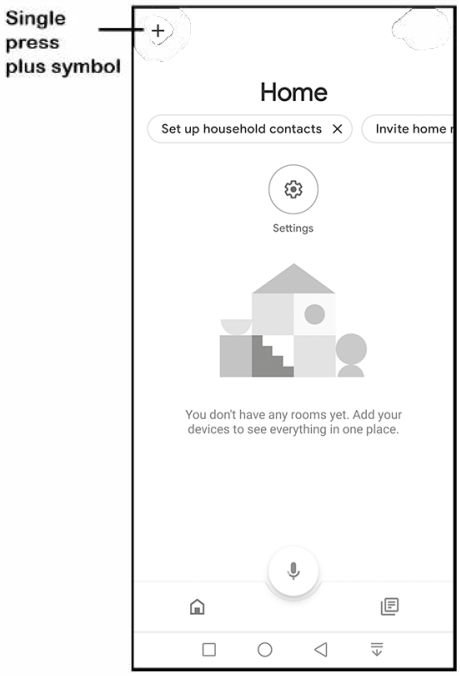

Once your fire is installed, and switched on, download and open the Google Home app. Once open single press the plus symbol in the top left hand corner.

2

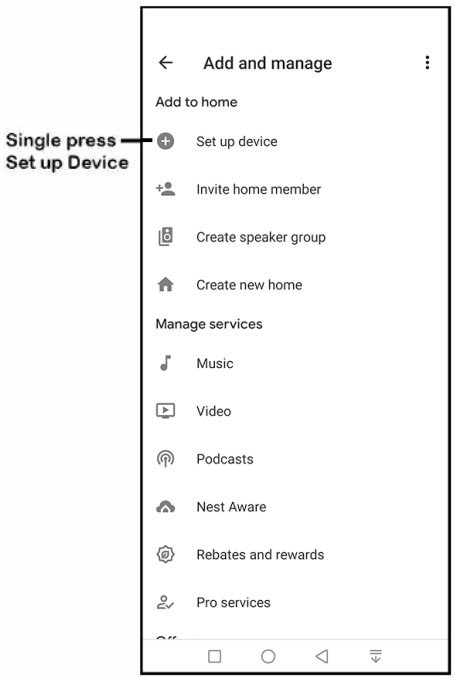

Single press Set up Device on the pop up list.

3

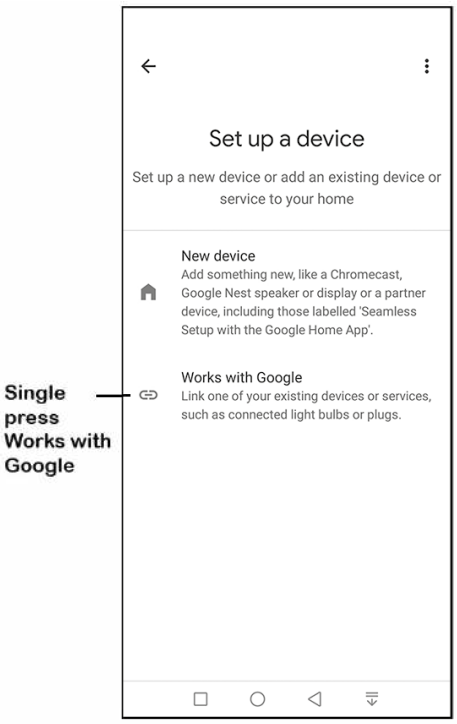

Single press Works with Google.

4

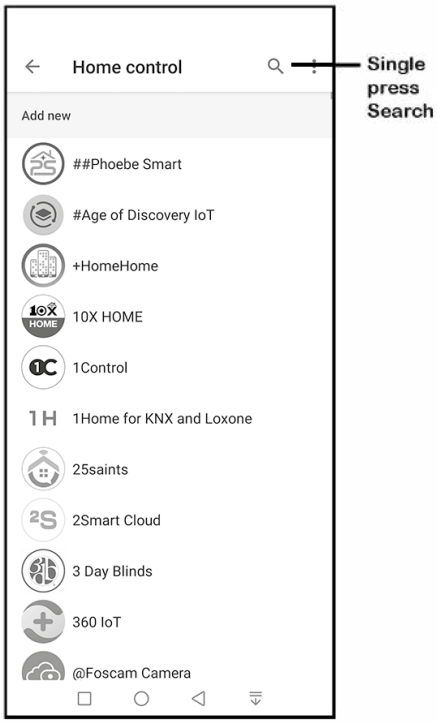

Single press the Search icon in the top right corner.

5

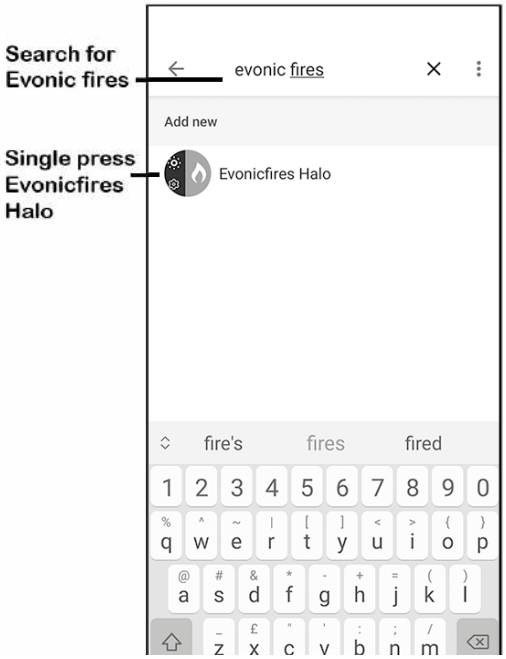

Type in Evonic Fires, single press search and then select the Evonic Fires E-Smart icon.

6

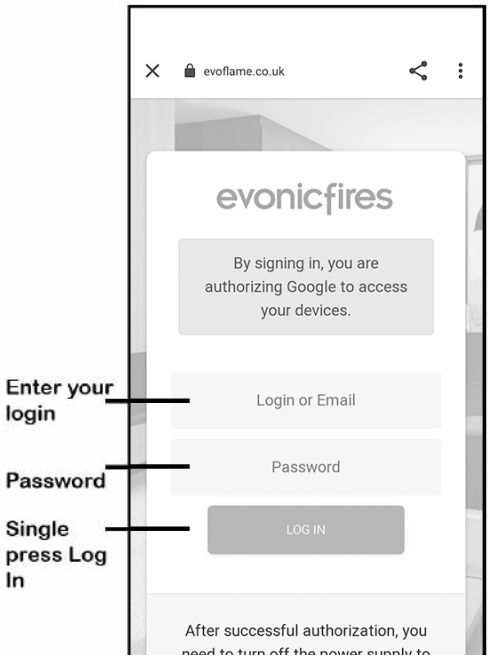

Once in the Evoflame log in page, enter the log in details that you previously entered in the app set up process, and single press Log In. Your appliance is now paired with Google Home!

COMMANDS FOR AMAZON ALEXA

When using Amazon Alexa or to control your appliance settings remember to substitute the words 'the fire' for whatever you have named your appliance.

TURNING THE APPLIANCE ON AND OFF

"Alexa, turn fire on." / "Alexa, turn the fire off."

TURNING THE HEATER ON AND OFF

"Alexa, set fire heater to auto." / "Alexa, set fire heater to off."

CHANGING THE TEMPERATURE
ALEXA CAN ONLY CHANGE THE TEMPERATURE BETWEEN 10° & 37°.

"Alexa, set temperature to 27 degrees."

"Alexa, make it warmer in there." - Increases the temperature by 3°

"Alexa, make it cooler in there." - Decreases the temperature by 3°

CHANGING THE FLAME EFFECT

"Alexa, set animation to....."

COMMANDS FOR GOOGLE HOME

When using Google Home to control your appliance settings remember to substitute the words 'the fire' for whatever you have named your appliance. Please note that the Google Home app cannot control the heater in the appliance.

TURNING THE APPLIANCE ON AND OFF

"Ok Google, turn on the fire." / "Ok Google, turn off the fire."

CHANGING THE FLAME EFFECT

"Ok Google, change the animation to ..... on the fire."

E-SMART CLOUD APP LED CONNECTION

1

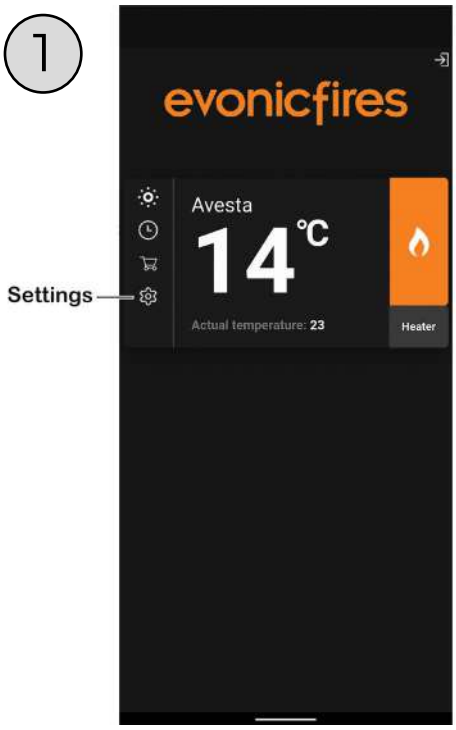

Once the LED strip is plugged into the mains and turned on. Go to the E-Smart app, then select Settings on your Home Page.

2

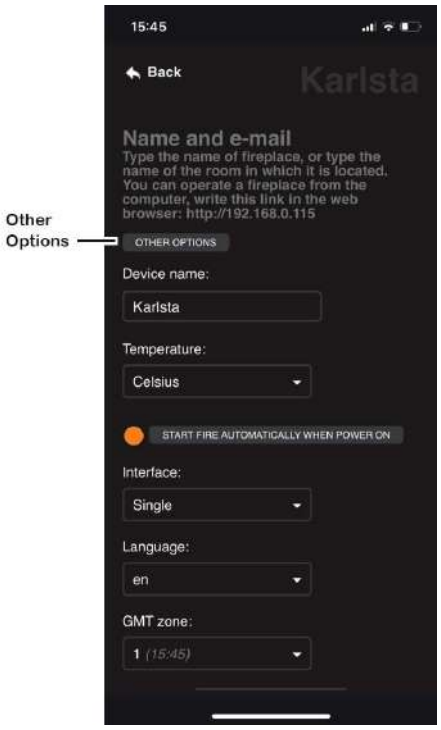

In Settings go to Other Options.

3

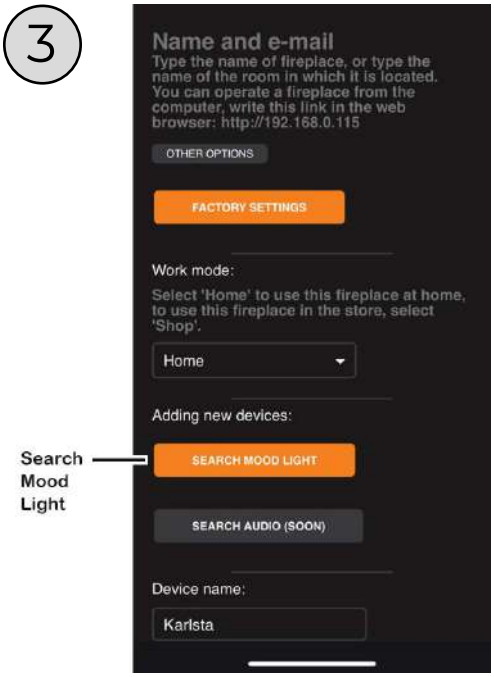

Click on Search Mood Light, and wait for the app to connect to the LED strip. This will take approximately 1 minute. Once the LED strip has been successfully connected, the strip will show solid green.

4

Once connected, the mood light option will show on your Home Page, as above.

TROUBLESHOOTING GUIDE

FAULT	POSSIBLE CAUSE	SOLUTION
No power to appliance	Power lead has become disconnected.	Ensure the power lead has been adequately plugged in.
	ON/OFF switch not turned to the **ON** position.	Double check the position of the **ON/OFF** switch.
	Fuse blown.	Check fuse box. Always consult a qualified electrician when dealing with the fuse box.
LED lighting not working/ partially working	Loose connection or disconnected wire.	Check relevant LED connections.
	LED shorting out.	Locate short and ensure strip is not touching metalwork. Replace LED strip if necessary.
	LED blown.	Replace LED strip.
	Blown driver on PCB board.	Replace PCB board.
Heater blowing cold air	Fan clogged.	Heater fan requires cleaning.
	Faulty element.	Element will need to be replaced.
	Not enough air clearance above the heater.	Required clearance has not been adhered to - **2" (50mm).**

FAULT	POSSIBLE CAUSE	SOLUTION
Noisy heater	Fan unbalanced.	Ensure fan has been attached to housing correctly.
	Fan catching on housing while turning.	Adjust fan to prevent catching on the case.
	Fan has come loose from cradle.	Tighten fan cradle or screws holding fan onto cradle.
Connectivity/ Poor WiFi signal	Router may be too far away from unit.	Re-position the router if possible or install WiFi booster to improve signal reach.
	Internet may be operating on 5hz frequency.	Contact your internet provider to change the frequency to 2.4hz to improve range.

WARRANTY

Evonic Fires 5-year warranty – 1 year parts & labour + 4 years parts supplied.

The above warranty terms and conditions, as of **1st May 2022**, are applicable for all relevant products purchased after this date. Appliances despatched prior to this date will have an alternative warranty as set out within the Installation and User Instructions that was supplied with the product, this was usually a standard 2-year warranty.

To receive your Extended Warranty your Evonic Fires product must have been purchased from an authorised stockist within our Retailer Network and your warranty registered with Evonic Fires through the online form - **evonicfires.co.uk/register-your-product**. The commencement date for the warranty period is the date of purchase. **Your product must be registered within 30 days of purchase to secure the additional warranty term.**

The product must be adequately serviced and maintained. Evonic Fires provide maintenance call outs at a cost, and information on this can be obtained by contacting our head office. Please see your Evonic Installation Instructions for further information on how to service and maintain your appliance.

During your extended warranty period, only parts supplied or authorised by Evonic Fires can be used to repair your fireplace, and these spare parts can be obtained by contacting our service department at **service@evonicfires.co.uk** or calling **01789 263868**.

Consumable items such as glass, screens, LED's, LED boards, filters and power supplies which are either subject to normal wear and tear or parts that require replacement in connection with normal maintenance are not covered within the extended warranty. These items are covered for the first 12 months.

To make a warranty claim, evidence must be supplied to our service department in the form of pictures, videos, or both. Failure to supply evidence to support your warranty claim may invalidate or delay the claim. Any visit by an Evonic Fires engineer will incur a service charge after the first year. We will not accept or reimburse the cost(s) of any third party who undertakes any work carried out on the product or fits parts, unless we have approved such work in advance of it being carried out.

WARRANTY EXCLUSIONS AND LIMITATIONS

The Evonic Extended Warranty does not cover:

1. Damage resulting from installation and usage where the appliance has not been installed or used in accordance with the CK Fires Ltd installation and operation instructions, or if the installation does not conform to local building, fire, and safety regulations.

2. Issues with mains/spur connections of power supply.

3. Damage resulting from the product not being adequately maintained. (Please see your CK Fires Ltd Installation and Operating Instructions for further information on how to service and maintain your appliance).

4. Damage caused by unauthorised modifications, use or repair.

5. Damage or defects caused by the product being stored in a damp, unheated environment.

6. Consequential loss (to the extent permitted by the law) relating to other associated products that have not been supplied by CK Fires Ltd.

7. Consequential loss (to the extent permitted by law) related to decorations, furnishings, or other household assets.

8. Removal and re-installation costs.

WARRANTY EXCLUSIONS AND LIMITATIONS

Repaired or replaced products are covered only for the remainder of the original warranty period. In the event of a claim being made, this must be reported to your retailer or CK Fires Ltd within 14 days of the fault occurring/being noticed. In the event of a product fault occurring during the warranty period years 2-5, CK Fires Ltd will send the appropriate component or goods necessary to rectify the fault, free of charge.

Nothing in the Extended Warranty shall make CK Fires Ltd liable for any or special, incidental, or consequential damages, injury to persons or property, or any other consequential loss beyond the consumer's statutory rights. The liability on these issues is covered by our Terms and Conditions of Sale.

CK Fires Ltd total liability extends only to the purchase price paid for the goods, except where such a limitation is prohibited by statute. CK Fires Ltd, in the event of a warranty claim, reserves the right either to replace the goods in question or to refund the purchase price of the goods. For product sold outside the UK and Ireland, UK law will prevail.

The Evonic Fires Extended Warranty does not affect your statutory rights.

REGISTER YOUR EVONIC FIRE

By registering your product on our website you ensure 4 years parts only cover on top of your standard one year warranty. Scan the QR code to take you directly to the registration page and secure your extra cover.

REPORT A FAULT

If you have any difficulties or problems with your appliance then please get in touch so that we can assist you. Please scan the QR code to be taken to our websites Report a Fault page, we will then be in touch with you shortly.

NOTES

NOTES

evonicfires

CK Fires Ltd / Evonic Fires

1, Evonic House, Clifford Park, Clifford Lane,
Stratford-on-Avon, CV37 8HW
Tel: +44 (0)1789 263868 Fax: +44 (0)1789 293080
Email: sales@evonicfires.co.uk
www.evonicfires.co.uk
Follow us on:
Instagram | Facebook | Twitter | LinkedIn
@evonicfires