evonicfires

GENESIS I

INSTALLATION MANUAL

Genesis I 16

Genesis I 22

DOWNLOAD THE NEW E-SMART PLUS APP FROM THE APPLE APP STORE OR GOOGLE PLAY

CONTENTS

Health and safety 4
Checks Before Installation 6
Spacer Removal 7
Installation 8
Front Glass Removal 9
Attaching the Fascia 10
Control Options 12
Remote Control 13
App Setup 14
Using the App 18
Heater Overview 19
Theme Overview 20
Time Overview 22
Account Settings 24
Problems Connecting & Factory Reset 25
Connecting to Amazon Alexa 26
Connecting to Google Assistant 28
Voice Control Commands 30
Factory Reset Guide 32
Troubleshooting Guide 34
Warranty Information 36

The following materials and components should be disposed of in accordance with the below table.

Metal - Steel or cast iron	Can be taken to a local recycling centre for reuse to reduce waste going to landfill.
Glass & Screens	Can be taken to a local recycling centre for reuse to reduce waste going to landfill.
Vermiculite	Non hazardous material. Vermiculite can be crushed up and used for plant bedding and ash used for composting or disposed of at a local recycling centre for reuse to reduce waste going to landfill.
Electrical components - Fans, heater elements, PCB's, Power pack's, LED's	Dispose at a local recycling centre In accordance with latest WEEE directive.
Log fuel effects	These logs contain refractory ceramic fibre materials which requires disposal in accordance with WEEE legislation.
Natural Wood	Can be taken to a local recycling centre for reuse to reduce waste going to landfill.

EU DIRECTIVES

All Evonic Fires products meet the requirements of the EC Directives.
These directives have been met by compliance with the following standards:

EU 2011-65/EU 2015/863 Restriction of Hazardous Substances.

References to the relevant designated standards used:

EN 55014-1:2006 + A1:2009 + A2:2011 Electromagnetic Compatibility.

EN 55014-2:2015 Electromagnetic Compatibility.

EN 61000-3-2:2014 Electromagnetic Compatibility (EMC). Limits. Limits for Harmonic Current Emissions.

EN 61000-3-3:2013 Electromagnetic Compatibility (EMC). Limits. Limitation of Voltage Changes, Voltage Fluctuations and Flicker.

EN 60335-1:2012 + A11:2014 Household and similar electrical appliances - Safety

EN 60335-2-30:2009+A11:2012 Household and similar electrical appliances. Safety. Particular requirements for room heaters

UKCA STANDARDS

All Evonic Fires products are in conformity with the relevant UK Statutory Instruments (and their amendments).

2016 No. 1101 The Electrical Equipment (Safety) Regulations 2016

2016 No. 1091 The Electromagnetic Compatibility Regulations 2016

2012 No. 3032 The Restriction Of Use Of Certain Hazardous Substances In Electrical And Electronic Equipment Regulations 2012

IMPORTANT INFORMATION AND HEALTH & SAFETY

When using electrical appliances, basic precautions should always be followed to reduce the risk of fire, electric shock, and injury to persons, including the following:

- Read all of the instructions carefully before using the appliance, only use this appliance as described in this manual. Any other use not recommended by the manufacturer may cause injury to persons, or damage to the appliance.
- Remove all packaging and dispose of it at an appropriate recycling facility.
- When transporting or storing the appliance and power lead, keep in a dry place, away from excessive vibration and store so as to avoid damage.
- This fireplace is hot when in use. To avoid burns, do not let bare skin touch hot surfaces. The trim around the heater outlet becomes hot during heater operation. DANGER: High temperatures may be generated under certain abnormal conditions.
- Do not install this appliance immediately in front of a fixed socket outlet.
- Do not install this appliance in the immediate surroundings of a bath, shower, swimming pool or any other area where the appliance could come into contact with water or humidity, e.g. a bathroom.
- Do not use in areas where gasoline, paint, or any flammable liquids are used or stored.
- This appliance is only suitable for indoor use, do not use outdoors.
- Do not cover the appliance, or let the air inlet/outlet to be obstructed in any way as it may overheat.
- Keep the power lead away from hot surfaces and the heater outlet. Do not route the power lead in front of the appliance, or under any carpets or rugs. Do not allow the power lead to be coiled up once installed, as this can cause overheating.
- This appliance must be firmly fixed to or recessed into, a flat internal wall.
- A maintenance hatch must be installed into the surrounding installation to allow future access.
- Always use a certified electrician should new circuits or outlets be required. And always use properly grounded, fused and polarised outlets.
- Where the power lead passes through any masonry wall, stone surround etc. ensure that suitable rubber bushes are fitted at any possible wear points.
- If the power lead is damaged do not use the appliance until it has been replaced.
- Do not use any external switching device, timers, or extension leads. Do not connect the appliance to a circuit that is frequently switched on and off by the utility.
- In the event of a malfunction, switch off the appliance, and disconnect it from the mains power supply. Have the appliance inspected by a certified electrician before reusing.
- Do not use the appliance if it is damaged. In the event of any damage to the appliance, please contact the retailer from whom the appliance was purchased.
- Any repairs must only be performed by a certified electrician.
- Extreme caution is necessary when any heater is used by, located near children or people of reduced mobility, and whenever the unit is left operating and unattended.
- Young children should be supervised to ensure that they do not play with the appliance.
- Disconnect from the power supply before performing any cleaning, maintenance or relocation of the unit. Do not use steam cleaners, or aerosols near the appliance.
- Do not burn wood or anything else in this appliance.
- Do not strike the glass. The glass used is toughened safety glass, if broken it will shatter into small chunks which are less likely to cause injury.
- Do not drill or screw any new holes into the appliance.

CHECKS BEFORE INSTALLATION - ALL MODELS

INSTALLATION DO'S AND DONT'S

Before installing the appliance please read and take into account the following important requirements;

- Consult a qualified professional to check the structure of the installation site.
- If installing into an existing chimney, make sure to adequately block off the flue.
- The appliance must never be installed in front of an electrical socket.
- The appliance must not be installed anywhere that it may come into contact with water, i.e. a bathroom.
- Do not wet plaster directly onto the appliance.

CHECKS BEFORE INSTALLATION

We recommend turning on the appliance before installation, connect the appliance to a power source using the provided electrical lead, and depress the right side of the **ON/OFF** switch.

Remove the electrical lead from the wall and continue with the installation.

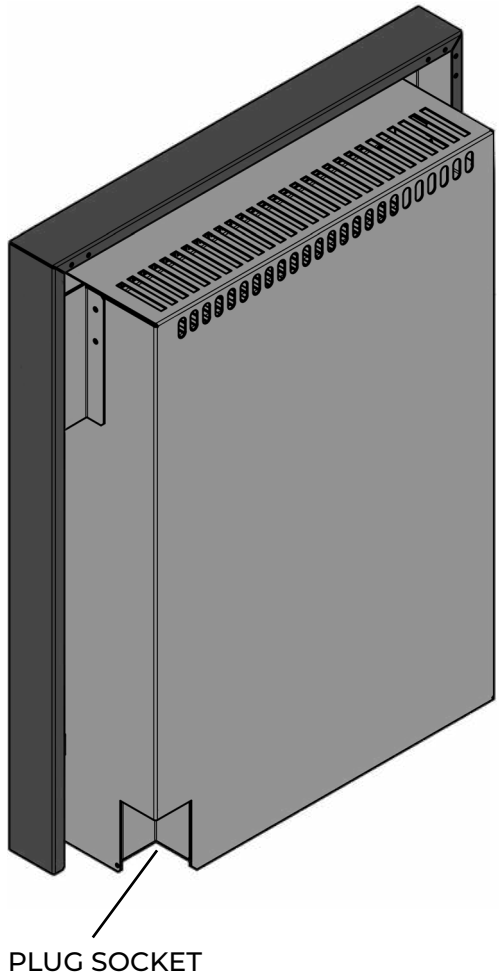

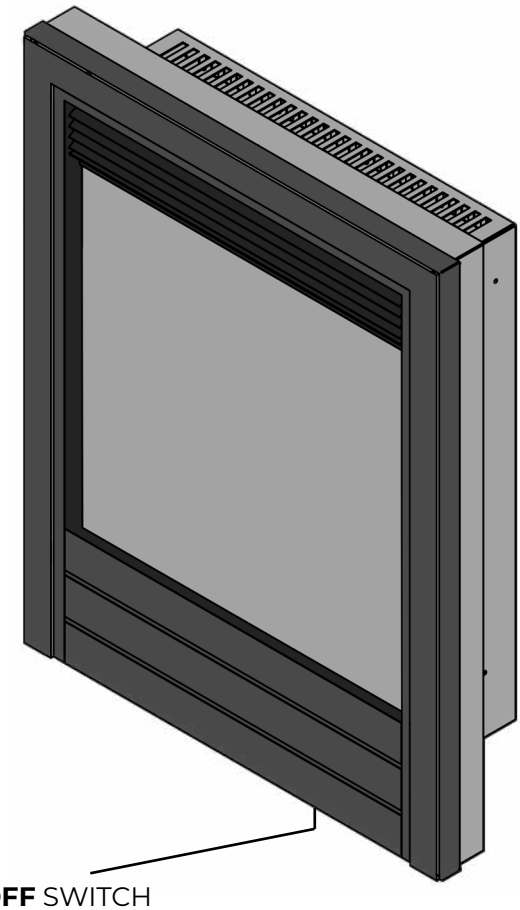

INSET INSTALLATION - SPACER REMOVAL

Some of our inset models come with a spacer attached to allow installation into shallow recesses. If you are looking to achieve a flush installation, you will need to remove the spacer. To remove the spacer, you will need to undo the 6 screws that keep it in place. These are indicated in **Fig 1.** Remove the 6 screws and then carefully pull the spacer away from the case of the fire **(Fig 2).**

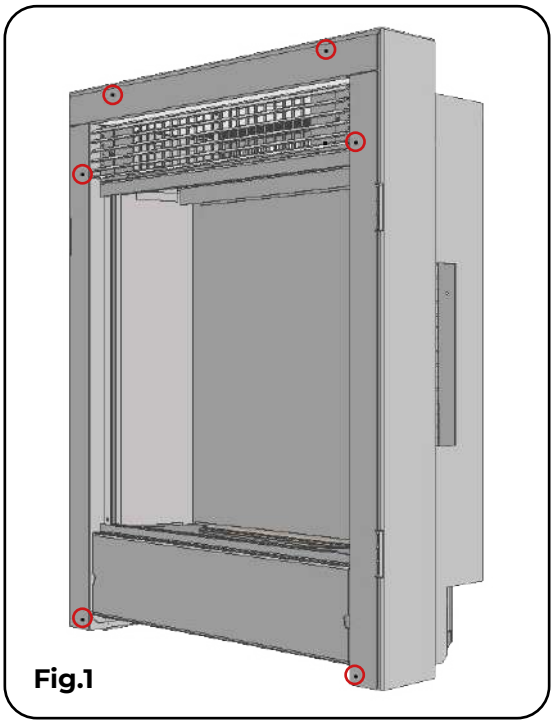

Fig.1

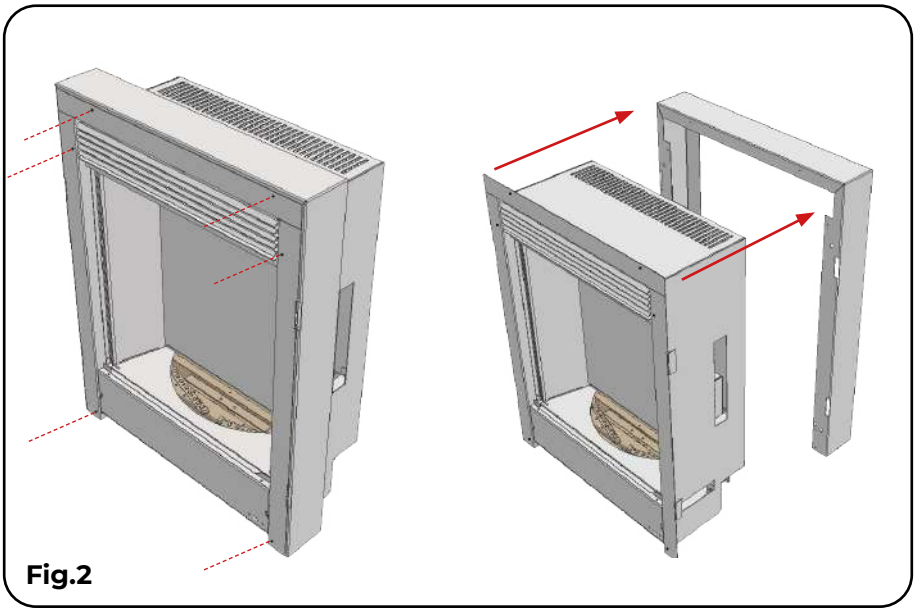

Fig.2

INSET INSTALLATION - ALL MODELS

All our inset models are designed to be fitted into a standard 16” wide x 22” high opening. Before starting the installation check the dimensions of both the appliance and your opening to ensure that they align well.

Please note, if you are installing into an existing chimney breast it is imperative that the flue is adequately blocked off.

SLIDE IN

Once the dimensions have been checked, attach the electrical lead to the power inlet on the back lower right. Connect the electrical lead to the mains power, then slide the appliance into the prepared opening.

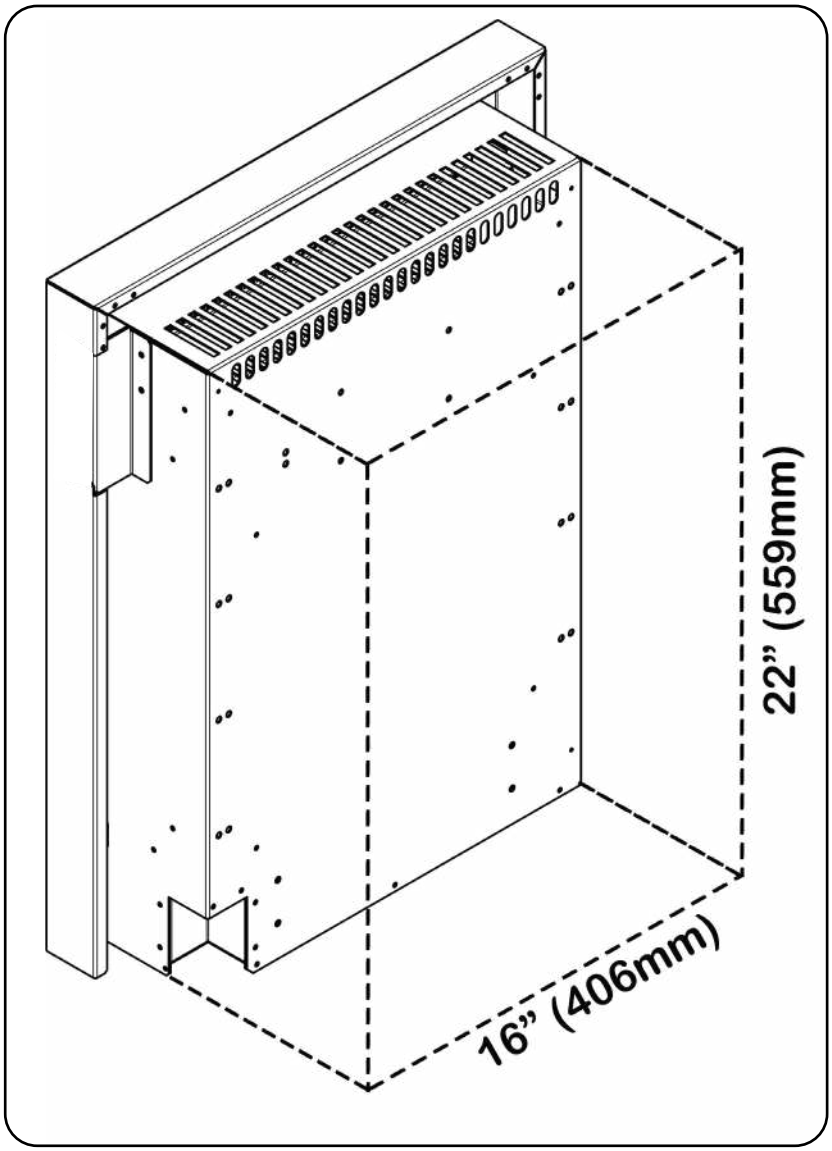

FRONT GLASS REMOVAL - ALL MODELS

1

Unscrew the two screws, and remove the bottom glass retainer from the appliance.

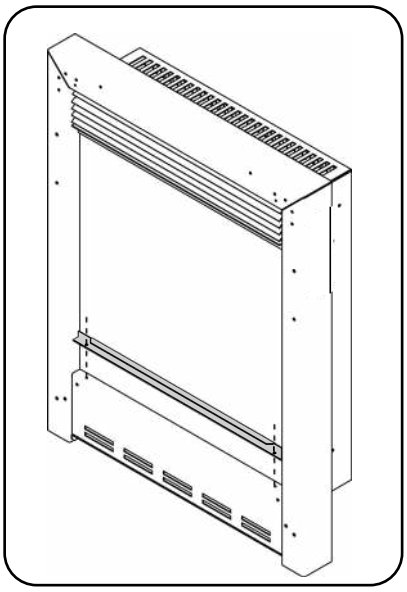

2

The glass can now be removed from the appliance.

To replace the glass, follow the steps in reverse.

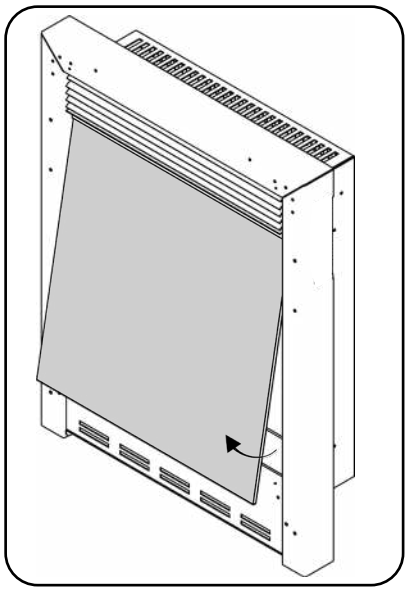

FITTING THE FASCIA

MAGNETS

The following fascias are attached with magnets;

Colorado / Kepler / Argenta / Balham

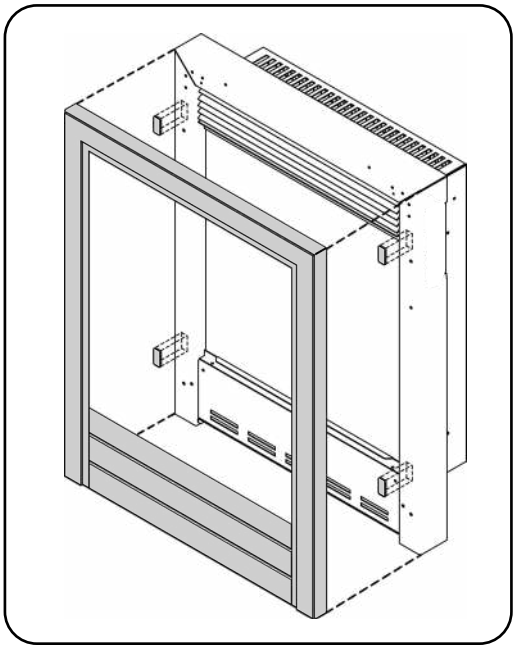

SCREWED

The Brooklyn and Detroit fascia are attached using screws. There are 4 screw holes located in the outside plaster kit which line up with 4 holes in the rear of both the Brooklyn and Detroit fascias. Offer up the fascia, and secure in place by screwing the fascia to the fire.

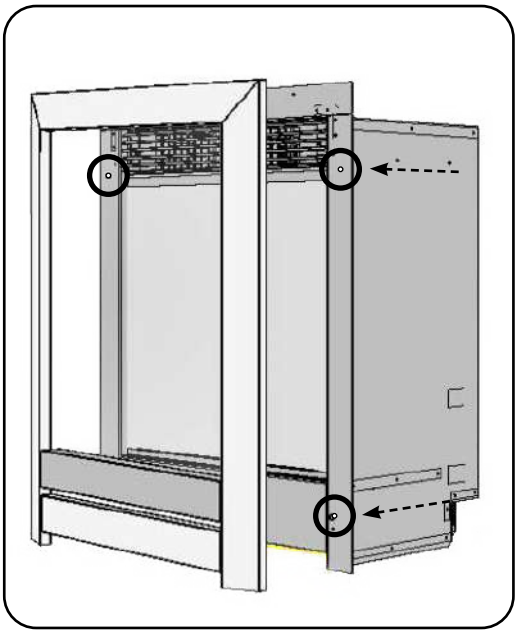

MOUNTED

The Strellar cast fascia is secured to the front of the appliance with two top mounted clips and a mounting bracket. Line up the two clips with the top of the mounting bracket and slot them down into the bracket.

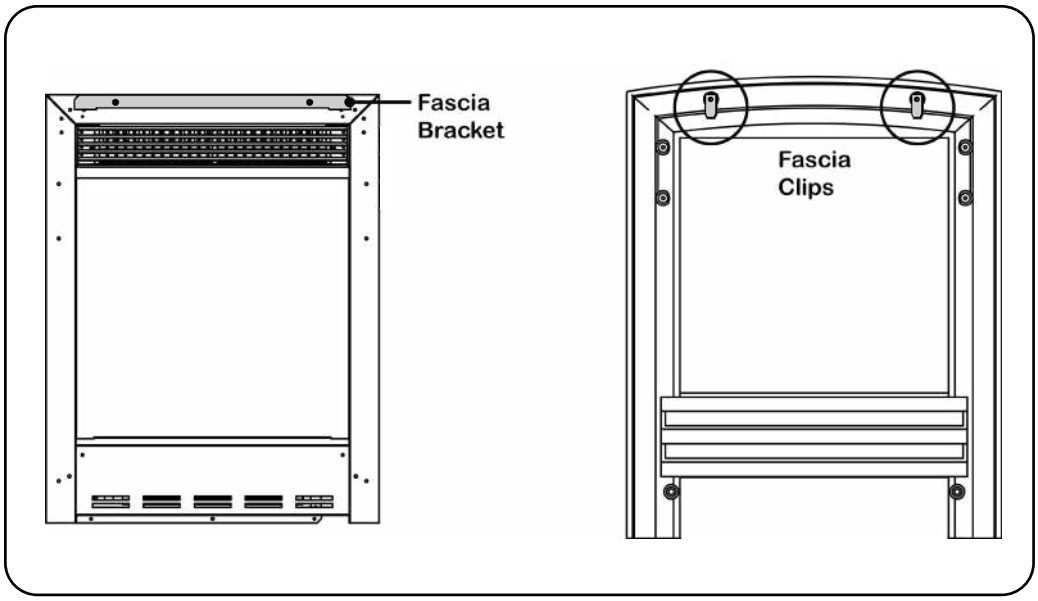

The cast frame can now be screwed to the appliance using the 2x screws supplied. The screw holes are located at the lower part of the frame. Once these are fitted, the fret panel can be fitted in front of this.

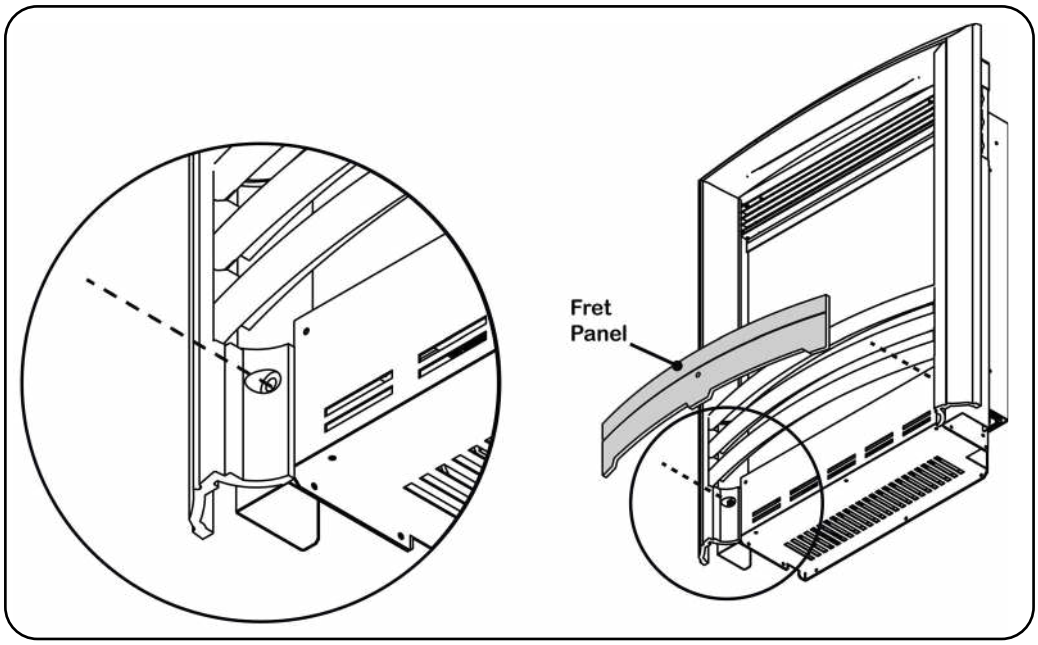

OPERATION

There are two ways to control all the features of your Evonic appliance - remote or App control.

Our remote handset comes automatically paired and ready to operate straight out of the box. If you choose to control your appliance via the E-smart Cloud App your internet router and smart device should meet the following minimum requirements -

Wi-Fi Router

- Compatible with IEEE 802.11n/g/b
- WPA2 encryption
- Radio frequency: 2.4GHz band
- Wireless auto channel: auto search for wireless LAN radio channel free of interference
- Support for the User Datagram Protocol (UDP)
- The minimum distance from your internet router to the fireplace should be 70cm

Smart Device

- Minimum device requirements IOS 8.0 or Android 10

REMOTE CONTROL

1. Remote Control/Handset Pairing Process: After turning on the fireplace with the rocker switch, there is a 60-second pairing window. This window begins after a beep, which occurs 15-20 seconds after the fireplace is switched on. After the first beep, press the '**Heater ON**' button for 5 seconds until you hear a second beep. The pairing is now complete.

2. Factory Reset: To reset, press and hold the 'Change Log Colour' button until you hear a beep, then press and hold the 'Change Fuel Bed Effect' button until it beeps again. The reset process is complete.

3. Volume Control: To adjust the volume level, push the volume button up or down.

4. Log Colour Brightness Logic:
• (-) Button: There are 5 brightness levels: 100%, 75%, 50%, 25%, and 0%. Press the (-) button to decrease brightness by 25% each time, down to 0%.
• (+) Button: There are 5 brightness levels: 100%, 75%, 50%, 25%, and 0%. Press the (+) button to increase brightness by 25% each time, up to 100%.

5. Fuel Bed Brightness Logic:
• (-) Button: There are 5 brightness levels: 100%, 75%, 50%, 25%, and 0%. Press the (-) button to decrease brightness by 25% each time, down to 0%.
• (+) Button: There are 5 brightness levels: 100%, 75%, 50%, 25%, and 0%. Press the (+) button to increase brightness by 25% each time, up to 100%.

6. Flames Effect Logic:

• Pressing the button advances to the next flame height in the sequence: High, Medium, Low.

APP SETUP - CREATE YOUR ACCOUNT

1

Download on the App Store

GET IT ON Google Play

Navigate to the **Google Play Store** or **Apple App Store** on your device.

2

In the search bar, type **E-Smart plus** and download the application to your device.

3

Navigate to the **E-Smart Plus** App on your device and open it.

1

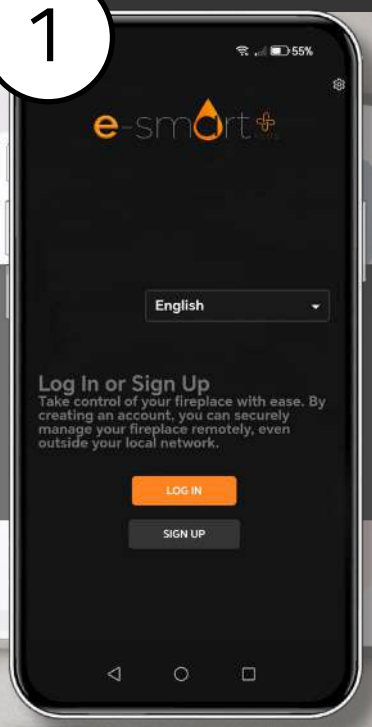

Launch the e-smart plus app and this screen will appear. You need to create an account before you begin to link your fireplace. Press the '**Sign Up**' button to continue.

2

Enter your email address and create a password. Click '**Agree to Privacy Policy**', then press '**Registration**' to confirm. Please ensure your passwords match in both fields.

3

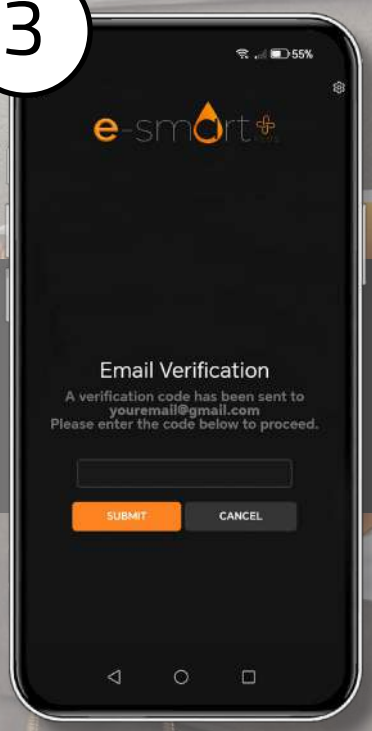

A verification code will be sent to your chosen email address. Enter this code into the email verification box in the app and press submit. Your account should now be activated.

APP SETUP - CONNECT YOUR FIREPLACE

1

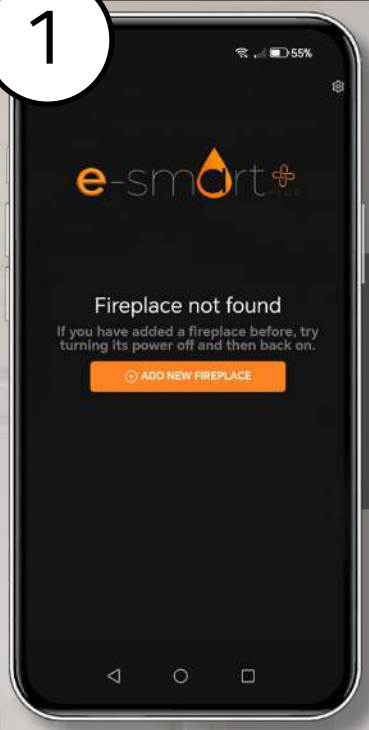

Ensure your fire is **ON** and your devices bluetooth is turned **ON**. Press the '**Add New Fireplace**' button.

2

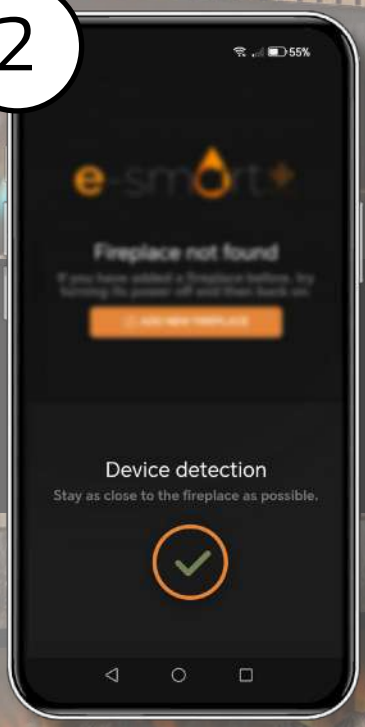

Your device will now look for your fireplace using Bluetooth. Once it has been found, **a green tick will be displayed**.

3

The next step is to connect to your router. A drop down menu will appear where you can **select your preffered network**.

4

Once you have selected your network, **enter the WiFi password**.

5

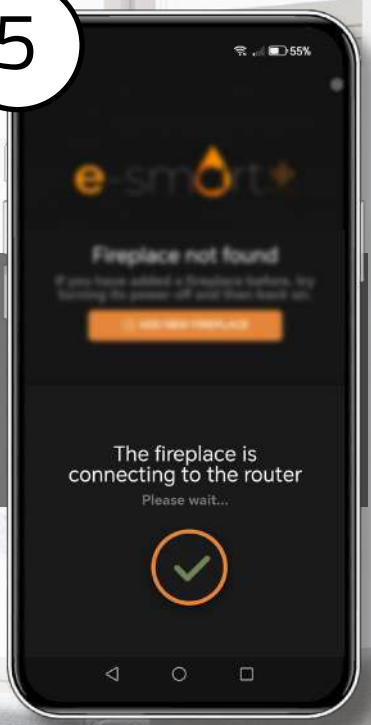

The connection process will now begin and you will see this screen. Please note: This process may take **30-60** seconds. During the connection, your fireplace will turn **OFF**, then back **ON**.

6

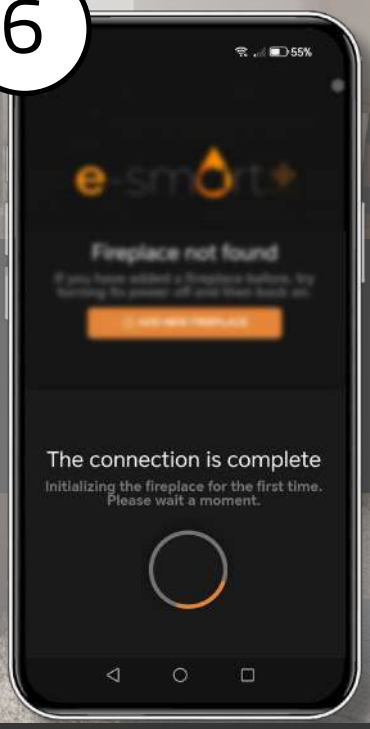

When this process is finalising, you will see this screen. You will then be automatically directed to the homepage of the e-smart + App where you can control your fireplace.

USING THE APP

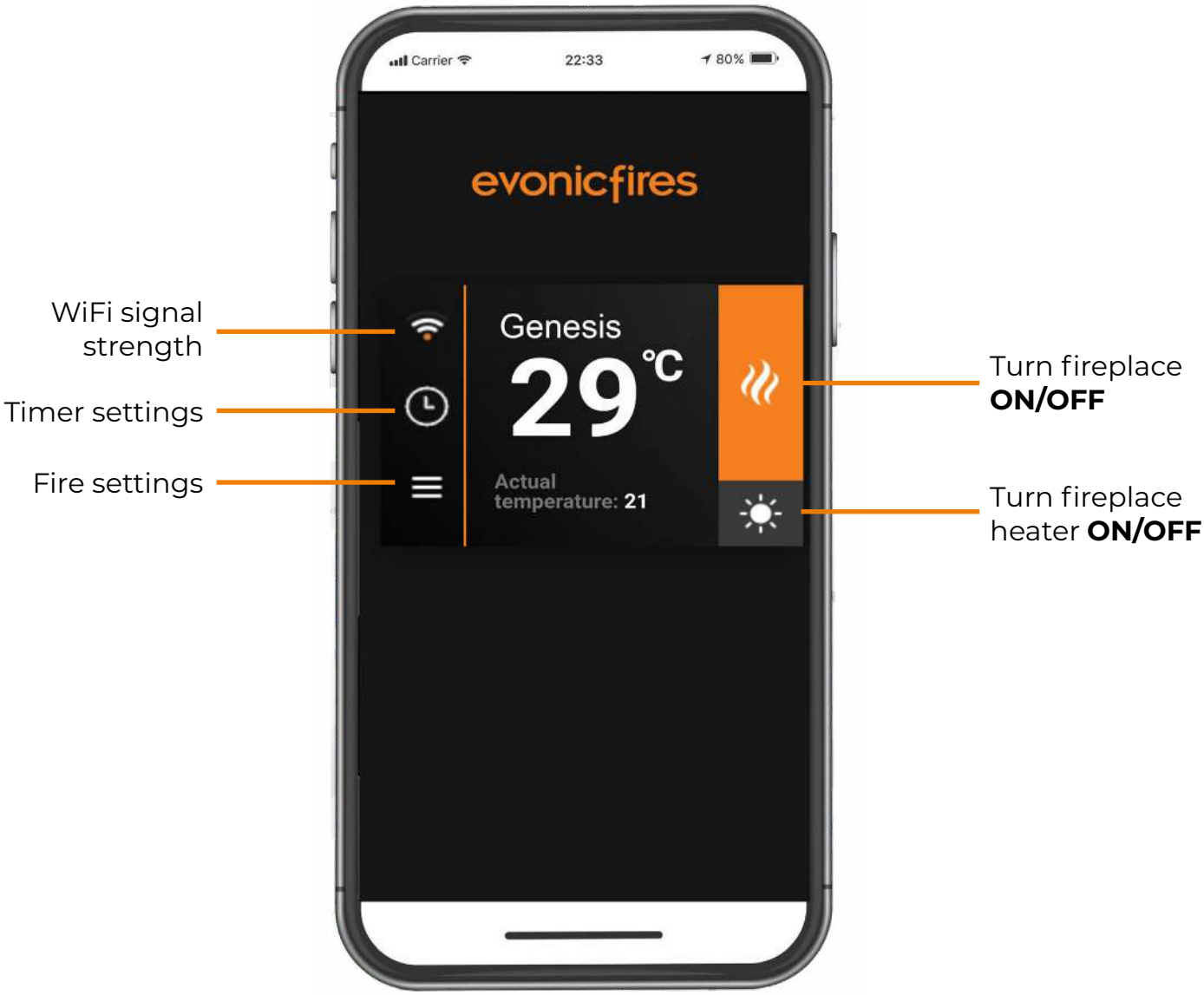

SCREEN NAVIGATION

On the home page of the E-smart Cloud App you can see the name of your fireplace, the chosen temperature, and the actual temperature. On the right side you can turn the lights in the fireplace on and off, and also turn the heater on and off. On the left side you can access the fireplaces settings and view your WiFi signal strength.

To enter the **Heater Overview screen**, press the middle of the home screen where the temperature is displayed.

HEATER OVERVIEW

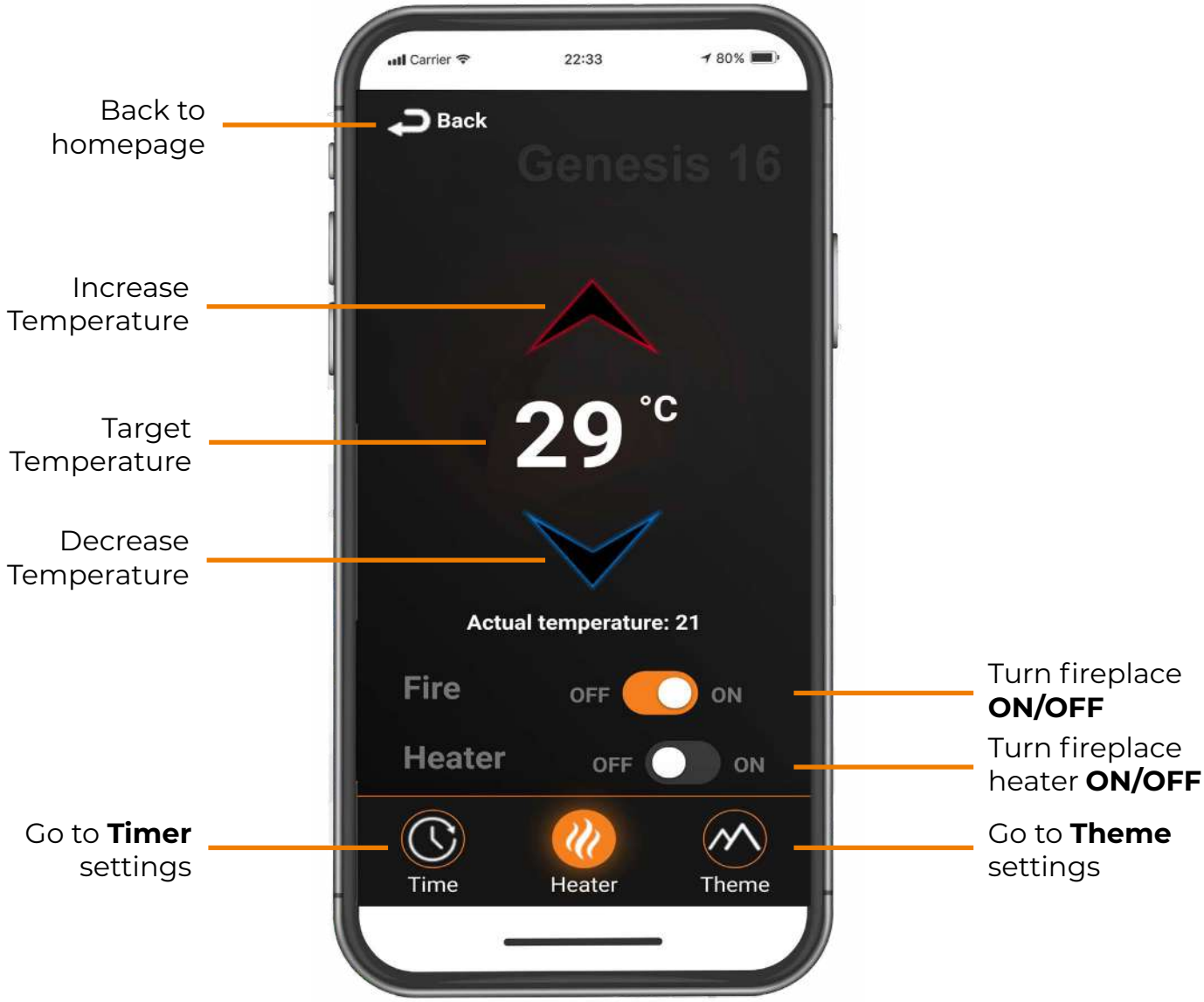

SCREEN NAVIGATION

The Heater overview screen allows you to access all the key features of your fireplace. From this page you can turn your heater and fireplace **ON/OFF** and control temperature settings.

At the bottom of this screen, you can also access your **theme settings** and **timer settings**.

THEME OVERVIEW

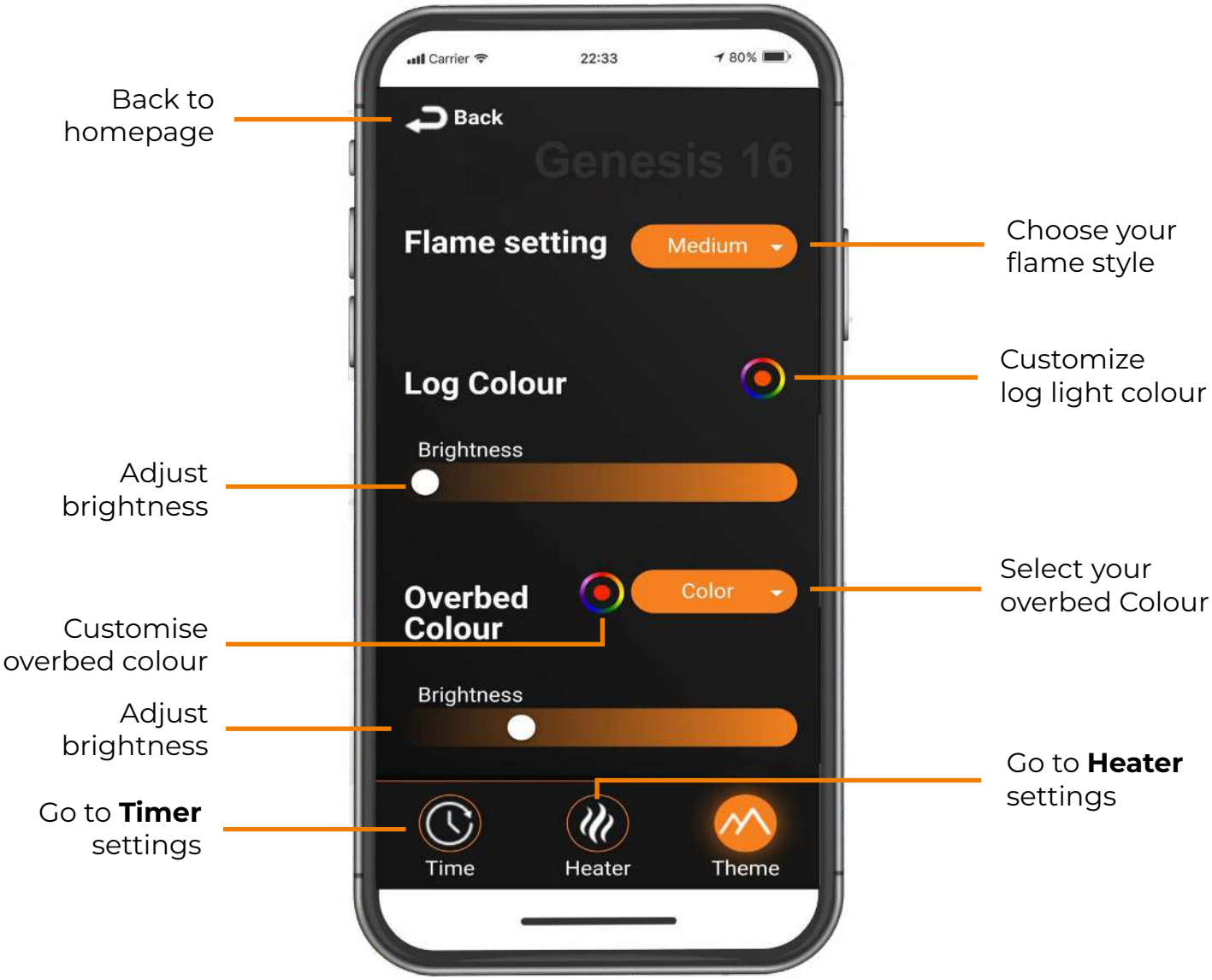

SCREEN NAVIGATION

Press the Flame Setting drop-down menu to access all available flame styles. You can also customise your log light color, as well as adjust the LED brightness. You can select an overbed style, as well as adjust the brightness of your ember bed LED's.

Scroll down on the scene page to access further settings.

At the bottom of this screen, you can also access your **heater settings** and **timer settings**.

THEME OVERVIEW CONTINUED

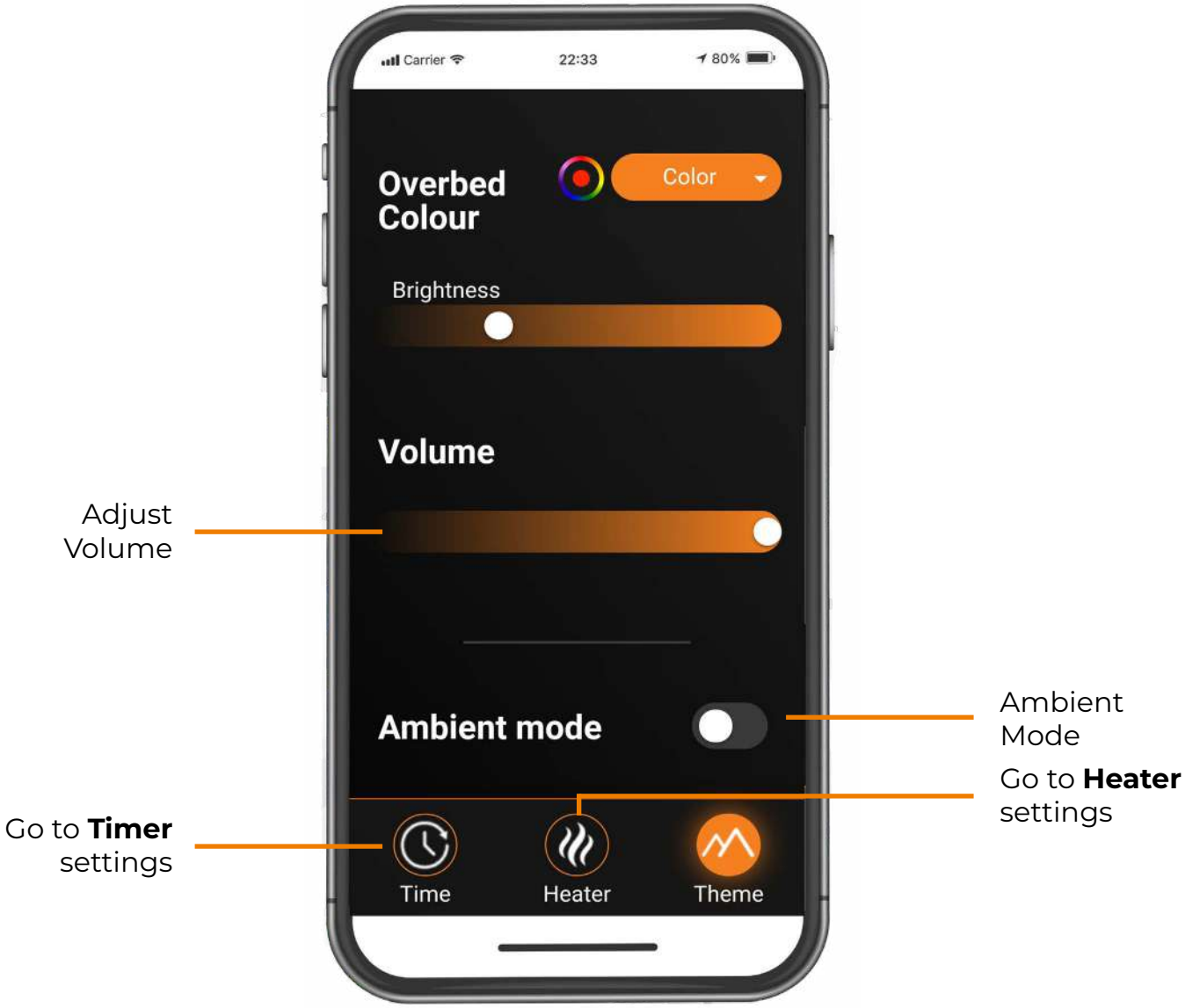

SCREEN NAVIGATION

Customers can adjust the volume of their appliance by swiping left or right, until the desired volume is achieved.

With Ambient mode selected, it will use your chosen color as an ambient light in the fireplace when turned off.

At the bottom of this screen, you can also access your **heater settings** and **timer settings**.

TIME OVERVIEW

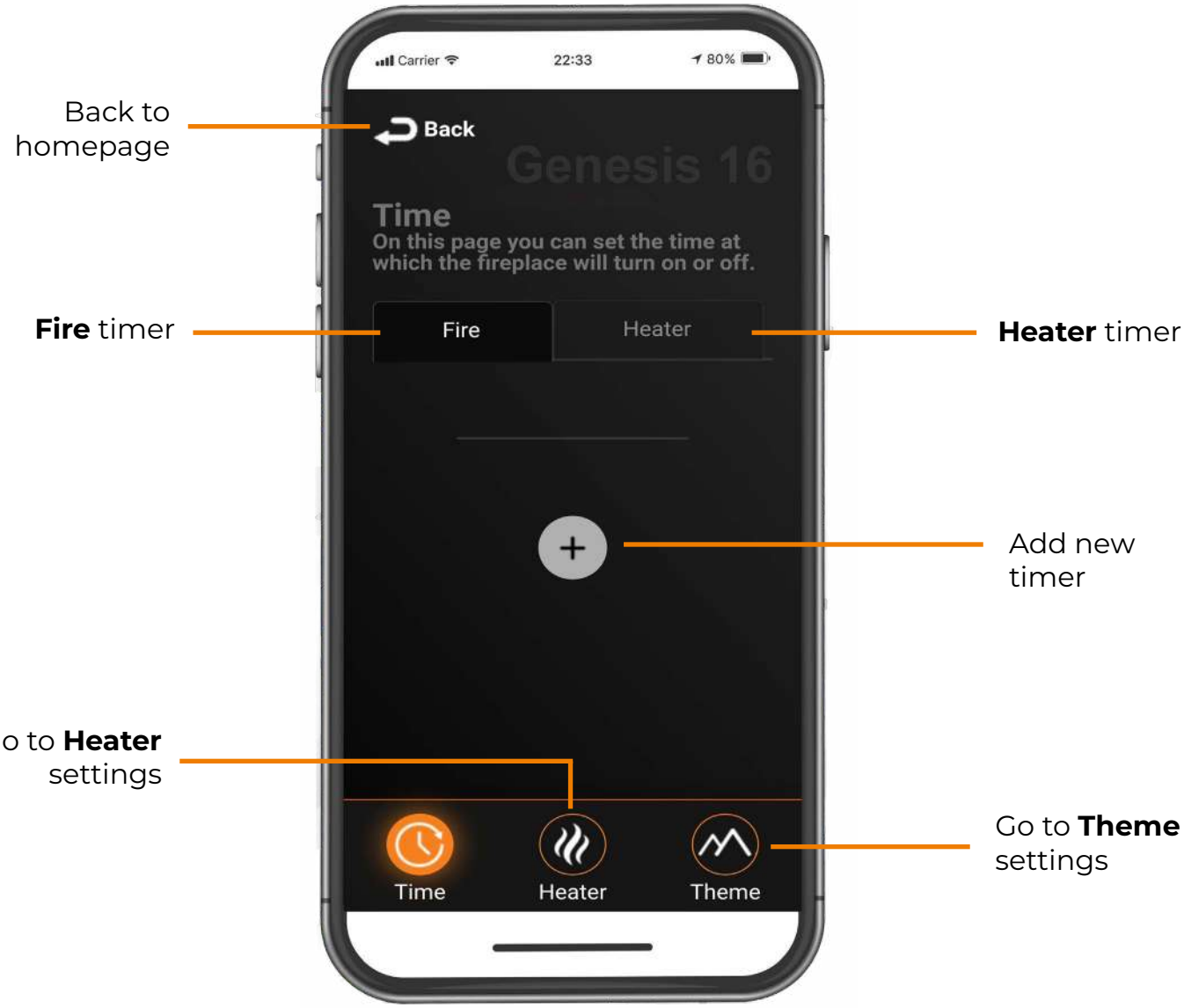

SCREEN NAVIGATION

When you first open the timer screen it will look like this. From this screen you can add new timers to both your fire and your heater.

At the bottom of this screen, you can also access your **scene settings** and **fire settings**.

TIME OVERVIEW CONTINUED

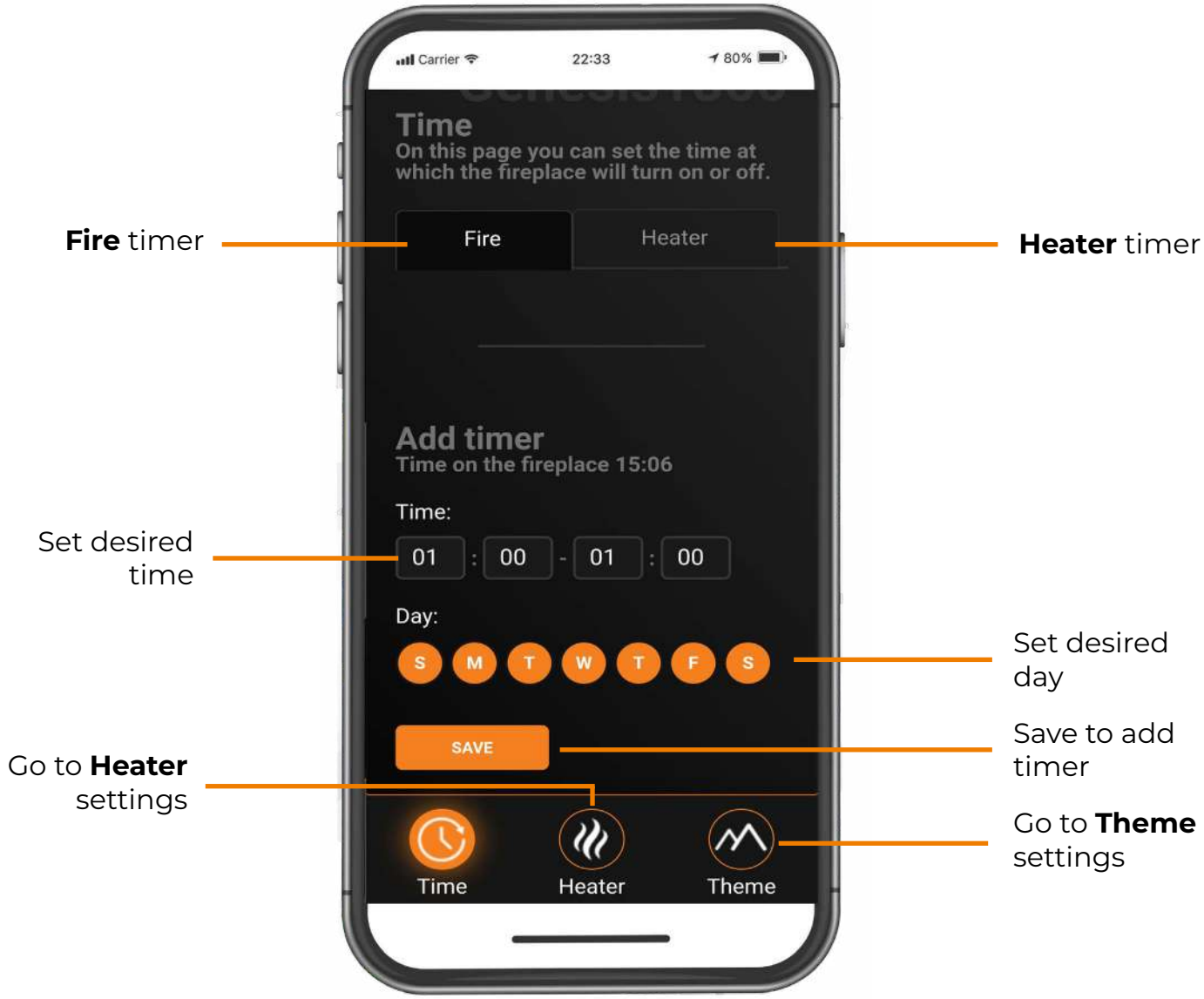

SCREEN NAVIGATION

To set up a timer, first select **fire** or **heater.** Under **time**, choose your desired start and end time using the 24-hour time format. You can then select which days you want this timer to be applicable on. Press save and your new timer has been created.

At the bottom of this screen, you can also access your **theme settings** and **heater settings**.

ACCOUNT SETTINGS

To access the account settings in the e-smart + App, **press the settings icon** in the top right corner of the App.

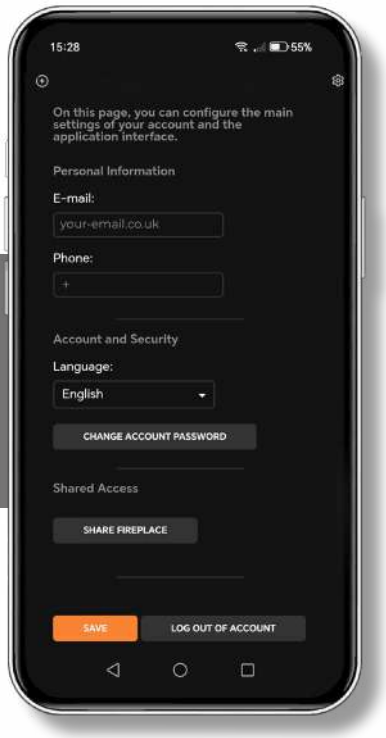

The settings panel will then be shown, where you can **update your email**, add your **phone number for backup recovery**, **select a language** and **share access to your fireplace**. You can also **log out** from this screen

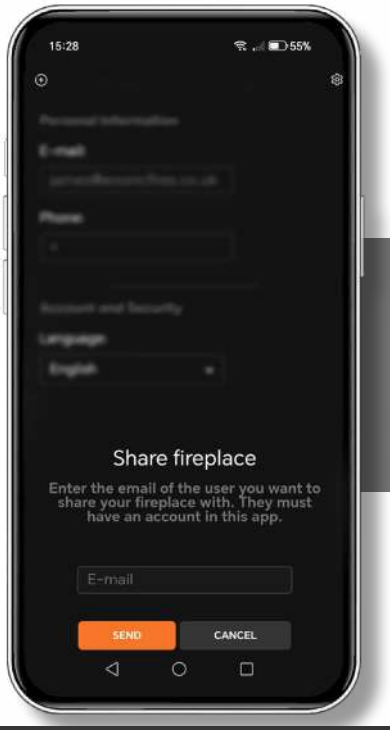

With our new **Shared Access feature**, you can send members of your household an email invite to create an account. Once this is done, they will have full access to the fireplace via the App without having to go through the initial setup phase.

PROBLEMS CONNECTING

If you are having problems connecting your fireplace with your device and router please try the following steps to fix the issue.

· *Switch fireplace OFF*

· *Switch wi-fi router OFF*

· *Switch fireplace back ON (Keeping router OFF)*

· *Open the wi-fi settings on your device - find and select your product / fireplace*

· *Open the e-smart App on your device and select the settings icon*

· *In 'Device Name', rename your fireplace (Be sure not to use numbers or spaces when renaming your fireplace)*

· *In the Settings menu scroll down to the IoT Registration and check that your email and password are correct. You can click the eye icon to help you see any mistakes. Press save.*

· *Check you have selected the correct network and the wi-fi password entered is correct, you can click the eye icon to help you see any mistakes.*

· *Make sure 'Static IP' is NOT selected (unless advised by an IT professional). Press save and connect.*

· *Wait 2 minutes for the fireplace to try and re-connect. Once this process is finished the App will show the home screen (Page 20).*

· *Switch your fireplace OFF.*

· *Switch your wi-fi router back ON.*

· *Switch your fireplace back ON.*

If your wi-fi signal is weak, the App will show you a red warning message located on the home screen.

If your problems persist after attempting to re-connect, please contact our service department.

RESETTING YOUR FIREPLACE

If you have entered a wrong email or password during the set-up process, then you may need to reset your fireplace to factory settings. This can only be done on your remote control.

1. Hold down **'Change log colour'** button until you hear an audible beep.

2. Hold down **'Change ember effect'** button until your hear an audible beep.

Your fire has now been reset to factory settings.

CONNECTING TO AMAZON ALEXA

1

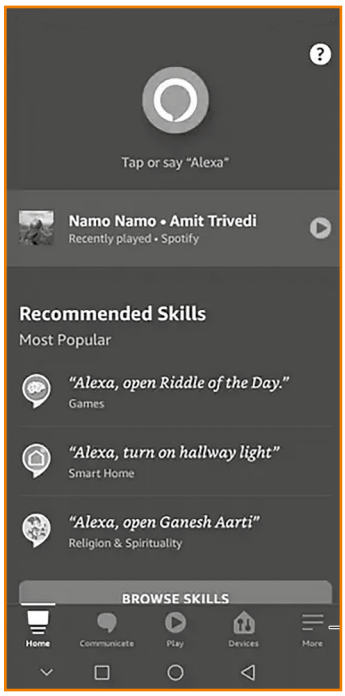

Once your fire is installed, and switched on, download and open the Amazon Alexa app. Once open single press More in the bottom right hand corner.

2

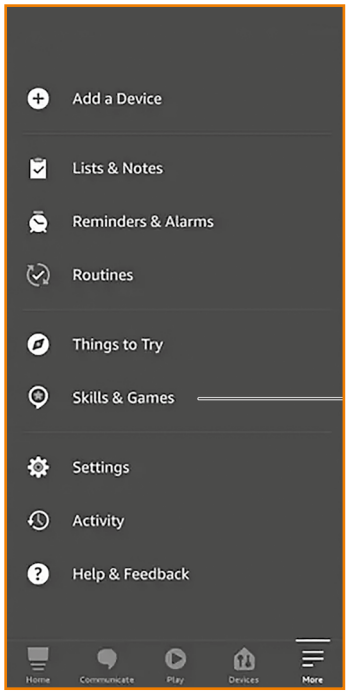

Single press Skills & Games on the pop up list.

3

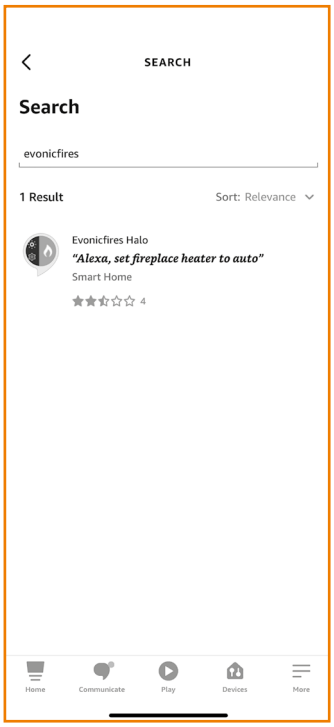

Single press Search and type in evonicfires. Select the Evonicfires Halo skill icon to open.

4

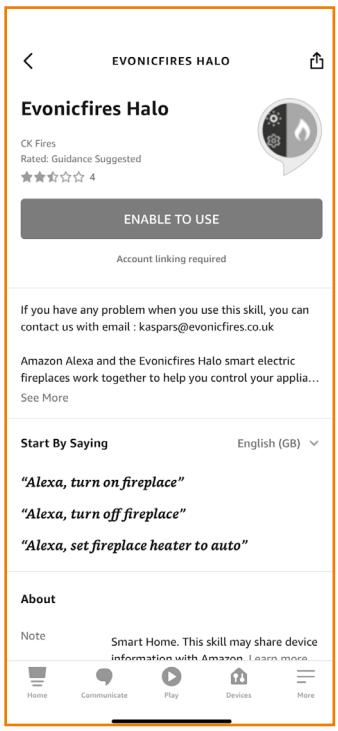

Now on the Evonicfires Halo skill page you can single press the Enable to Use button to go to the log in page.

5

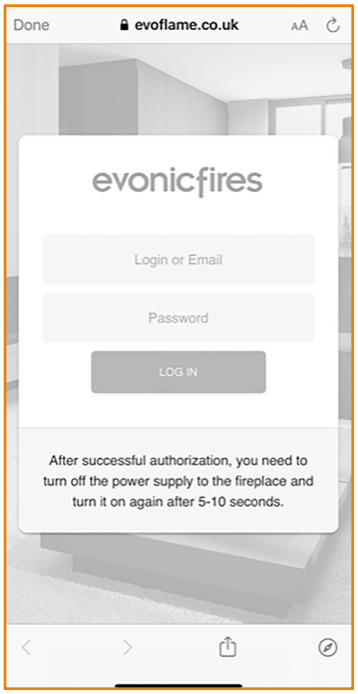

Enter the log in details that you previously entered in the app set up process, and single press Log In.

6

After a few moments your account will be linked, once this is done you can single press Close.

7

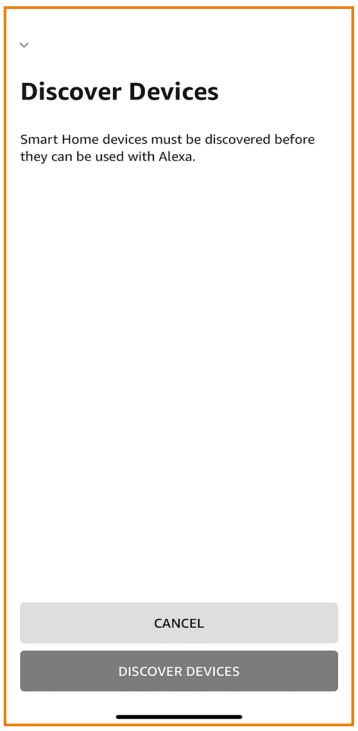

Single press Discover Devices to search for your fire.

8

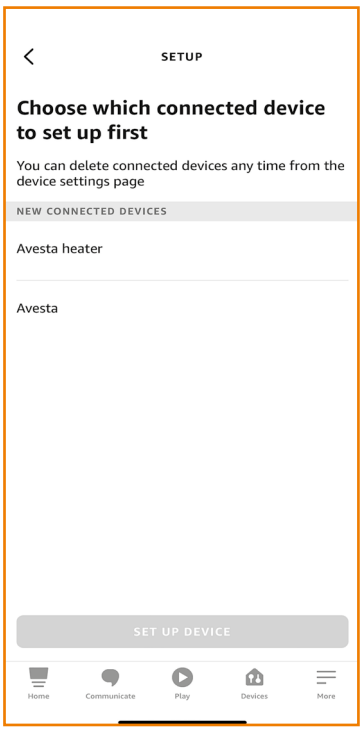

Your fire will show up as two devices, allowing you to programme the heater separately to the effects. Single press the second option, and Set up Device.

CONNECTING TO GOOGLE HOME

1

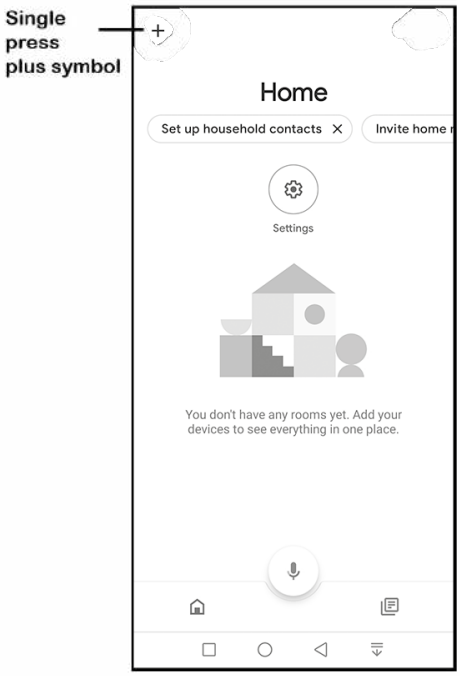

Once your fire is installed, and switched on, download and open the Google Home app. Once open single press the plus symbol in the top left hand corner.

2

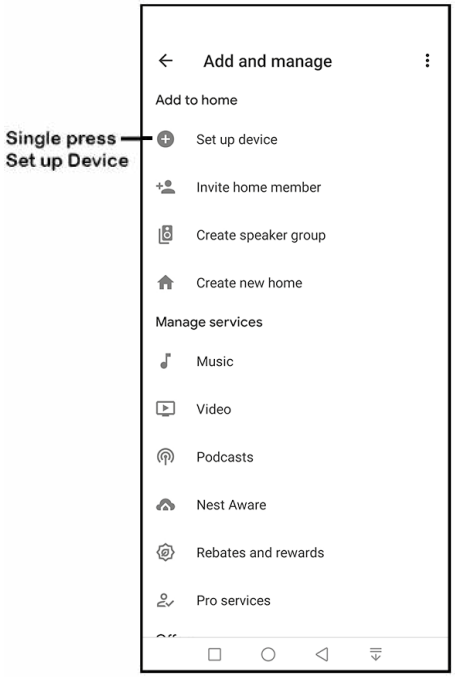

Single press Set up Device on the pop up list.

3

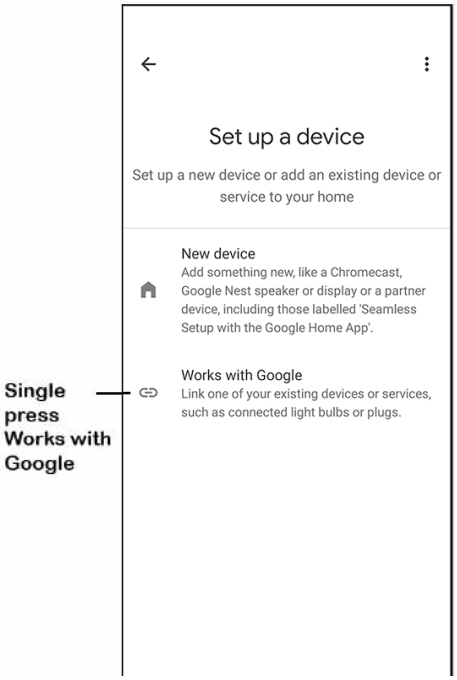

Single press Works with Google.

4

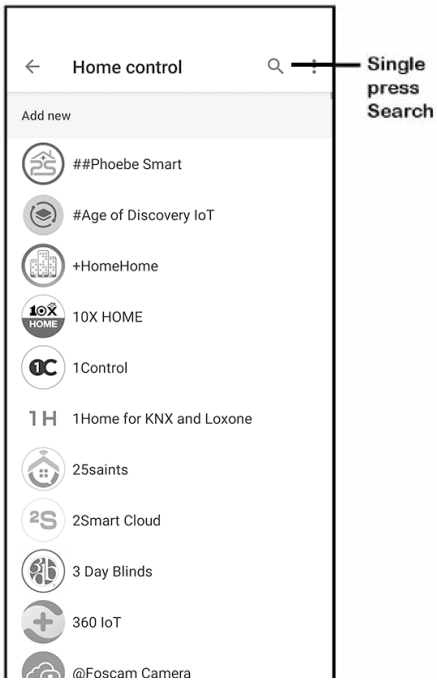

Single press the Search icon in the top right corner.

5

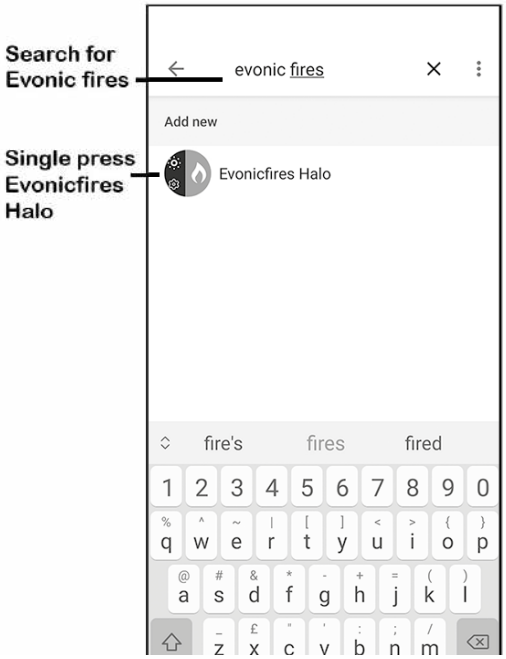

Type in Evonic Fires, single press search and then select the Evonic Fires E-Smart icon.

6

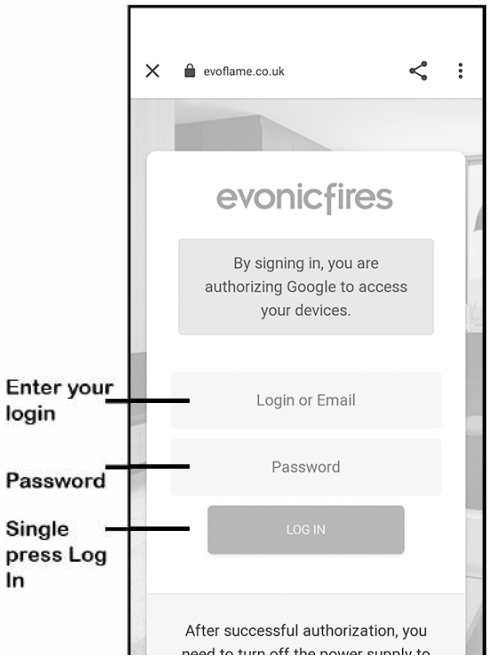

Once in the Evoflame log in page, enter the log in details that you previously entered in the app set up process, and single press Log In. Your appliance is now paired with Google Home!

COMMANDS FOR AMAZON ALEXA

When using Amazon Alexa or to control your appliance settings remember to substitute the words 'the fire' for whatever you have named your appliance.

TURNING THE APPLIANCE ON AND OFF

"Alexa, turn fire on." / "Alexa, turn the fire off."

TURNING THE HEATER ON AND OFF

"Alexa, set fire heater to auto." / "Alexa, set fire heater to off."

CHANGING THE TEMPERATURE
ALEXA CAN ONLY CHANGE THE TEMPERATURE BETWEEN 10° & 37°.

"Alexa, set temperature to 80 degrees farenheit"

"Alexa, make it warmer in there." - Increases the temperature by 3°

"Alexa, make it cooler in there." - Decreases the temperature by 3°

CHANGING THE FLAME EFFECT

Our holographic models have 3 flame styles to choose and these are numbered 1-3, so to select a flame you need to specify the number of the desired flame.

"Alexa, set animation to ONE"

"Alexa, set animation to TWO"

"Alexa, set animation to THREE"

COMMANDS FOR GOOGLE ASSISTANT

When using Google Home to control your appliance settings remember to substitute the words 'the fire' for whatever you have named your appliance. Please note that the Google Home app cannot control the heater in the appliance.

TURNING THE APPLIANCE ON AND OFF

"Ok Google, turn on the fire." / "Ok Google, turn off the fire."

CHANGING THE FLAME EFFECT

"Ok Google, change the animation to ONE on the fire"

"Ok Google, change the animation to TWO on the fire"

"Ok Google, change the animation to THREE on the fire"

BLACK REMOTE - FACTORY RESET GUIDE

Reconnecting Your Fire to a New Wi Fi Network

If you change your broadband provider or replace your router, you will need to factory reset your EvonicFires Black Edition before disconnecting your current broadband.
This ensures the fire can reconnect correctly to the new Wi Fi network.

Factory Reset Instructions

Step 1 – Hold the Lightbulb Button (Fig 1)

Press and hold the lightbulb button on the remote control until the fire beeps.

(Fig 1)

Step 2 – Hold the Flame Button (Fig 2)

After the first beep, press and hold the flame button with five lines pointing upwards until the fire beeps again.

CONTINUED...

Step 3 – Wait for the Fire to Restart

The fire will switch off and then turn back on automatically.

Once this happens, the factory reset is complete.

Important Notes

• Complete the factory reset before disconnecting your existing broadband.

• After resetting, reconnect the fire to your new Wi Fi network using the EvonicFires app.

• Keep the remote pointed towards the fire during the reset process.

Troubleshooting

If the fire does not beep or restart:

• Check that the remote batteries are working correctly.

• Move closer to the fire while performing the reset.

• Repeat the process from Step 1.

• If the issue continues, contact EvonicFires support.

TROUBLESHOOTING GUIDE

FAULT	POSSIBLE CAUSE	SOLUTION
No power to appliance	Power lead has become disconnected.	Ensure the power lead has been adequately plugged in.
	ON/OFF switch not turned to the **ON** position.	Double check the position of the **ON/OFF** switch.
	Fuse blown.	Check fuse box. Always consult a qualified electrician when dealing with the fuse box.
LED lighting not working/ partially working	Loose connection or disconnected wire.	Check relevant LED connections.
	LED shorting out.	Locate short and ensure strip is not touching metalwork. Replace LED strip if necessary.
	LED blown.	Replace LED strip.
	Blown driver on PCB board.	Replace PCB board.
Flame picture not showing	HDMI Cable has come loose from interior screen.	Make sure HDMI lead has been connected.
	Damaged interior screen.	Replace screen.
Heater blowing cold air	Fan clogged.	Heater fan requires cleaning.
	Faulty element.	Element will need to be replaced.
	Not enough air clearance above the heater.	Required clearance has not been adhered to - **2" (50mm).**

FAULT	POSSIBLE CAUSE	SOLUTION
Noisy heater	Fan unbalanced.	Ensure fan has been attached to housing correctly.
	Fan catching on housing while turning.	Adjust fan to prevent catching on the case.
	Fan has come loose from cradle.	Tighten fan cradle or screws holding fan onto cradle.
Connectivity/ Poor WiFi signal	Router may be too far away from unit.	Re-position the router if possible or install WiFi booster to improve signal reach.
	Internet may be operating on 5hz frequency.	Contact your internet provider to change the frequency to 2.4hz to improve range.

WARRANTY

CK Fires 5-year warranty – 1 year parts & labour + 4 years parts supplied.

The above warranty terms and conditions, as of **1st May 2022**, are applicable for all relevant products purchased after this date. Appliances despatched prior to this date will have an alternative warranty as set out within the Installation and User Instructions that was supplied with the product, this was usually a standard 2-year warranty.

To receive your Extended Warranty your CK Fires product must have been purchased from an authorised stockist within our Retailer Network and your warranty registered with CK Fires Fires through the online form - **evonicfires.co.uk/register-your-product**. The commencement date for the warranty period is the date of purchase. **Your product must be registered within 30 days of purchase to secure the additional warranty term.**

The product must be adequately serviced and maintained. CK Fires provide maintenance call outs at a cost, and information on this can be obtained by contacting our head office. Please see your CK Installation Instructions for further information on how to service and maintain your appliance.

During your extended warranty period, only parts supplied or authorised by CK Fires can be used to repair your fireplace, and these spare parts can be obtained by contacting our service department at **service@evonicfires.co.uk** or calling **01789 263868**.

Consumable items such as glass, screens, LED's, LED boards, filters and power supplies which are either subject to normal wear and tear or parts that require replacement in connection with normal maintenance are not covered within the extended warranty. These items are covered for the first 12 months.

To make a warranty claim, evidence must be supplied to our service department in the form of pictures, videos, or both. Failure to supply evidence to support your warranty claim may invalidate or delay the claim. Any visit by an CK Fires engineer will incur a service charge after the first year. We will not accept or reimburse the cost(s) of any third party who undertakes any work carried out on the product or fits parts, unless we have approved such work in advance of it being carried out.

WARRANTY EXCLUSIONS AND LIMITATIONS

The CK Fires Extended Warranty does not cover:

1. Damage resulting from installation and usage where the appliance has not been installed or used in accordance with the CK Fires Ltd installation and operation instructions, or if the installation does not conform to local building, fire, and safety regulations.

2. Issues with mains/spur connections of power supply.

3. Damage resulting from the product not being adequately maintained. (Please see your CK Fires Ltd Installation and Operating Instructions for further information on how to service and maintain your appliance).

4. Damage caused by unauthorised modifications, use or repair.

5. Damage or defects caused by the product being stored in a damp, unheated environment.

6. Consequential loss (to the extent permitted by the law) relating to other associated products that have not been supplied by CK Fires Ltd.

7. Consequential loss (to the extent permitted by law) related to decorations, furnishings, or other household assets.

8. Removal and re-installation costs.

WARRANTY EXCLUSIONS AND LIMITATIONS

Repaired or replaced products are covered only for the remainder of the original warranty period. In the event of a claim being made, this must be reported to your retailer or CK Fires Ltd within 14 days of the fault occurring/being noticed. In the event of a product fault occurring during the warranty period years 2-5, CK Fires Ltd will send the appropriate component or goods necessary to rectify the fault, free of charge.

Nothing in the Extended Warranty shall make CK Fires Ltd liable for any or special, incidental, or consequential damages, injury to persons or property, or any other consequential loss beyond the consumer's statutory rights. The liability on these issues is covered by our Terms and Conditions of Sale.

CK Fires Ltd total liability extends only to the purchase price paid for the goods, except where such a limitation is prohibited by statute. CK Fires Ltd, in the event of a warranty claim, reserves the right either to replace the goods in question or to refund the purchase price of the goods. For product sold outside the UK and Ireland, UK law will prevail.

The CK Fires Fires Extended Warranty does not affect your statutory rights.

REGISTER YOUR EVONIC FIRE

By registering your product on our website you ensure 4 years parts only cover on top of your standard one year warranty. Scan the QR code to take you directly to the registration page and secure your extra cover.

REPORT A FAULT

If you have any difficulties or problems with your appliance then please get in touch so that we can assist you. Please scan the QR code to be taken to our websites Report a Fault page, we will then be in touch with you shortly.

NOTES

NOTES

CK Fires Ltd / Evonic Fires

1 Evonic House, Clifford Park, Clifford Lane,
Stratford-on-Avon, CV37 8HW
Tel: +44 (0)1789 263868 **Fax:** +44 (0)1789 293080
Email: sales@evonicfires.co.uk

www.evonicfires.co.uk

Follow us on: