evonicfires

C-SERIES

INSTALLATION MANUAL

CONTENTS

Disposal....2

Standards....3

Health and safety....4

Installation....5

Spacer Removal....7

Front Glass Removal....8

Fitting the Fascia....9

Manual Controls....11

Troubleshooting Guide....12

Warranty....14

The following materials and components should be disposed of in accordance with the below table.

Metal - Steel or cast iron	Can be taken to a local recycling centre for reuse to reduce waste going to landfill.
Glass & Screens	Can be taken to a local recycling centre for reuse to reduce waste going to landfill.
Vermiculite	Non hazardous material. Vermiculite can be crushed up and used for plant bedding and ash used for composting or disposed of at a local recycling centre for reuse to reduce waste going to landfill.
Electrical components - Fans, heater elements, PCB's, Power pack's, LED's	Dispose at a local recycling centre In accordance with latest WEEE directive.
Log fuel effects	These logs contain refractory ceramic fibre materials which requires disposal in accordance with WEEE legislation.
Natural Wood	Can be taken to a local recycling centre for reuse to reduce waste going to landfill.

EU DIRECTIVES

All Evonic Fires products meet the requirements of the EC Directives.
These directives have been met by compliance with the following standards:

EU 2011-65/EU 2015/863 Restriction of Hazardous Substances.

References to the relevant designated standards used:

EN 55014-1:2006 + A1:2009 + A2:2011 Electromagnetic Compatibility.

EN 55014-2:2015 Electromagnetic Compatibility.

EN 61000-3-2:2014 Electromagnetic Compatibility (EMC). Limits. Limits for Harmonic Current Emissions.

EN 61000-3-3:2013 Electromagnetic Compatibility (EMC). Limits. Limitation of Voltage Changes, Voltage Fluctuations and Flicker.

EN 60335-1:2012 + A11:2014 Household and similar electrical appliances - Safety

EN 60335-2-30:2009+A11:2012 Household and similar electrical appliances. Safety. Particular requirements for room heaters

UKCA STANDARDS

All Evonic Fires products are in conformity with the relevant UK Statutory Instruments (and their amendments).

2016 No. 1101 The Electrical Equipment (Safety) Regulations 2016

2016 No. 1091 The Electromagnetic Compatibility Regulations 2016

2012 No. 3032 The Restriction Of Use Of Certain Hazardous Substances In Electrical And Electronic Equipment Regulations 2012

IMPORTANT INFORMATION AND HEALTH & SAFETY

When using electrical appliances, basic precautions should always be followed to reduce the risk of fire, electric shock, and injury to persons, including the following:

- Read all of the instructions carefully before using the appliance, only use this appliance as described in this manual. Any other use not recommended by the manufacturer may cause injury to persons, or damage to the appliance.
- Remove all packaging and dispose of it at an appropriate recycling facility.
- When transporting or storing the appliance and power lead, keep in a dry place, away from excessive vibration and store so as to avoid damage.
- This fireplace is hot when in use. To avoid burns, do not let bare skin touch hot surfaces. The trim around the heater outlet becomes hot during heater operation. DANGER: High temperatures may be generated under certain abnormal conditions.
- Do not install this appliance immediately in front of a fixed socket outlet.
- Do not install this appliance in the immediate surroundings of a bath, shower, swimming pool or any other area where the appliance could come into contact with water or humidity, e.g. a bathroom.
- Do not use in areas where gasoline, paint, or any flammable liquids are used or stored.
- This appliance is only suitable for indoor use, do not use outdoors.
- Do not cover the appliance, or let the air inlet/outlet to be obstructed in any way as it may overheat.
- Keep the power lead away from hot surfaces and the heater outlet. Do not route the power lead in front of the appliance, or under any carpets or rugs. Do not allow the power lead to be coiled up once installed, as this can cause overheating.
- This appliance must be firmly fixed to or recessed into, a flat internal wall.
- A maintenance hatch must be installed into the surrounding installation to allow future access.
- Always use a certified electrician should new circuits or outlets be required. And always use properly grounded, fused and polarised outlets.
- Where the power lead passes through any masonry wall, stone surround etc. ensure that suitable rubber bushes are fitted at any possible wear points.
- If the power lead is damaged do not use the appliance until it has been replaced.
- Do not use any external switching device, timers, or extension leads. Do not connect the appliance to a circuit that is frequently switched on and off by the utility.
- In the event of a malfunction, switch off the appliance, and disconnect it from the mains power supply. Have the appliance inspected by a certified electrician before reusing.
- Do not use the appliance if it is damaged. In the event of any damage to the appliance, please contact the retailer from whom the appliance was purchased.
- Any repairs must only be performed by a certified electrician.
- Extreme caution is necessary when any heater is used by, located near children or people of reduced mobility, and whenever the unit is left operating and unattended.
- Young children should be supervised to ensure that they do not play with the appliance.
- Disconnect from the power supply before performing any cleaning, maintenance or relocation of the unit. Do not use steam cleaners, or aerosols near the appliance.
- Do not burn wood or anything else in this appliance.
- Do not strike the glass. The glass used is toughened safety glass, if broken it will shatter into small chunks which are less likely to cause injury.
- Do not drill or screw any new holes into the appliance.

CHECKS BEFORE INSTALLATION - ALL MODELS

INSTALLATION DO'S AND DONT'S

Before installing the appliance please read and take into account the following important requirements;

- Consult a qualified professional to check the structure of the installation site.
- If installing into an existing chimney, make sure to adequately block off the flue.
- The appliance must never be installed in front of an electrical socket.
- The appliance must not be installed anywhere that it may come into contact with water, i.e. a bathroom.
- Do not wet plaster directly onto the appliance.

CHECKS BEFORE INSTALLATION

We recommend turning on the appliance before installation, connect the appliance to a power source using the provided electrical lead, and depress the right side of the **ON/OFF** switch.

Remove the electrical lead from the wall and continue with the installation.

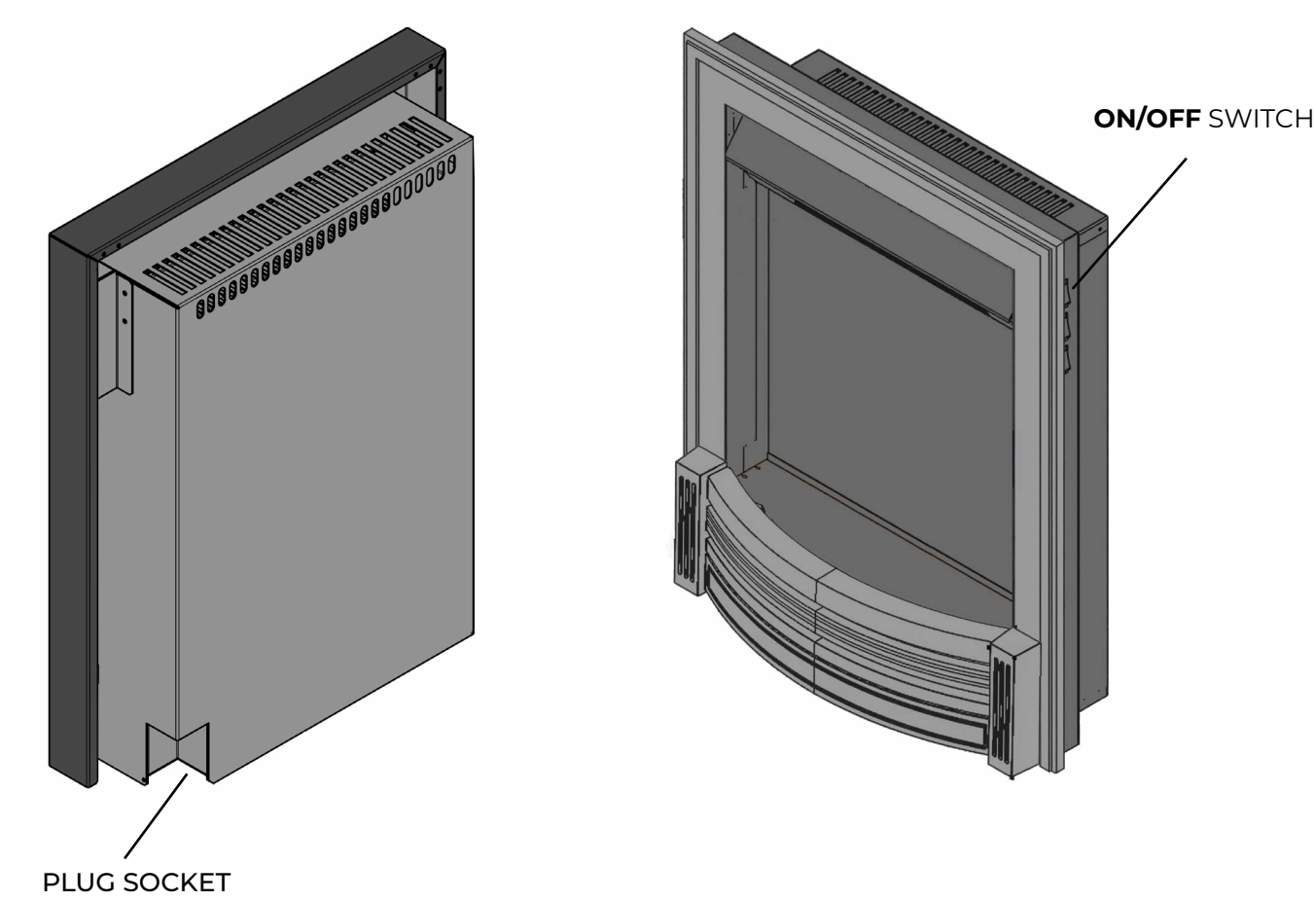

INSET INSTALLATION - ALL MODELS

All our inset models are designed to be fitted into a standard 16” wide x 22” high opening. Before starting the installation check the dimensions of both the appliance and your opening to ensure that they align well.

Please note, if you are installing into an existing chimney breast it is imperative that the flue is adequately blocked off.

SLIDE IN

Once the dimensions have been checked, attach the electrical lead to the power inlet on the back lower right. Connect the electrical lead to the mains power, then slide the appliance into the prepared opening.

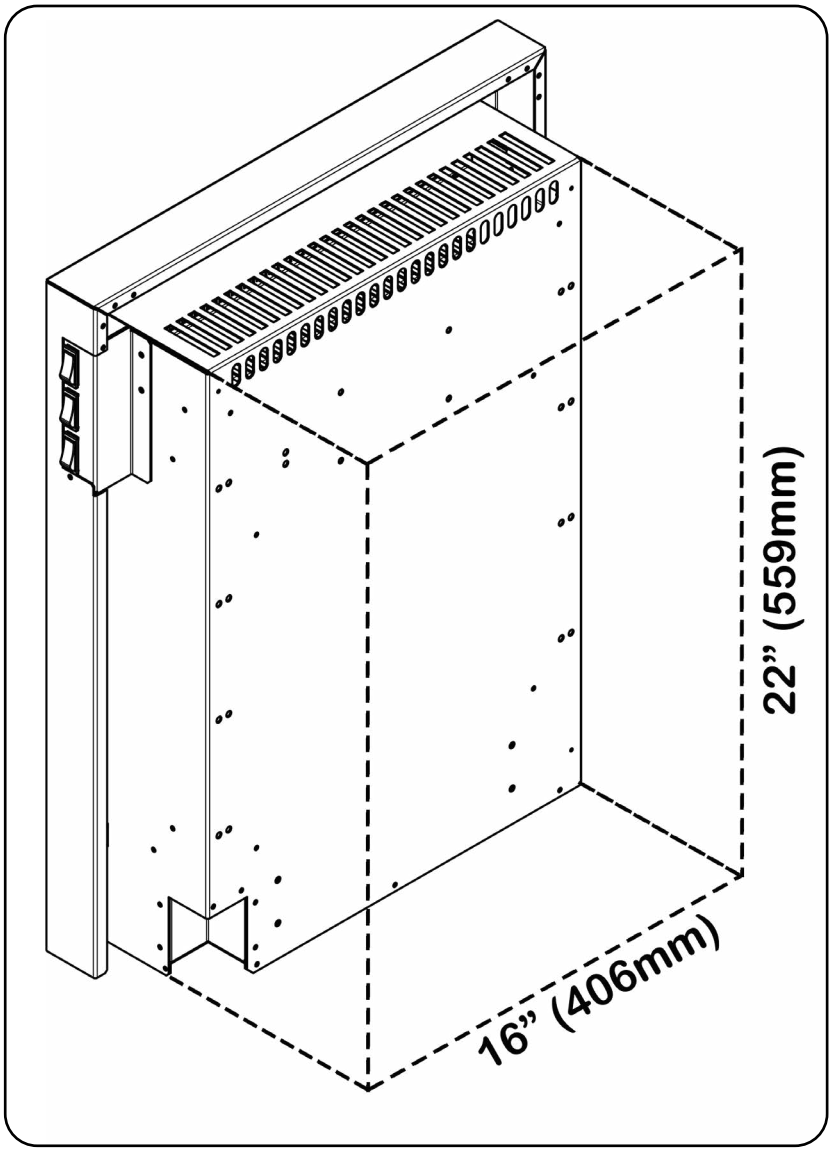

INSET INSTALLATION - SPACER REMOVAL

Some of our inset models come with a spacer attached to allow installation into shallow recesses. If you are looking to achieve a flush installation, you will need to remove the spacer. To remove the spacer, you will need to undo the 6 screws that keep it in place. These are indicated in **Fig 1.** Remove the 6 screws and then carefully pull the spacer away from the case of the fire **(Fig 2).**

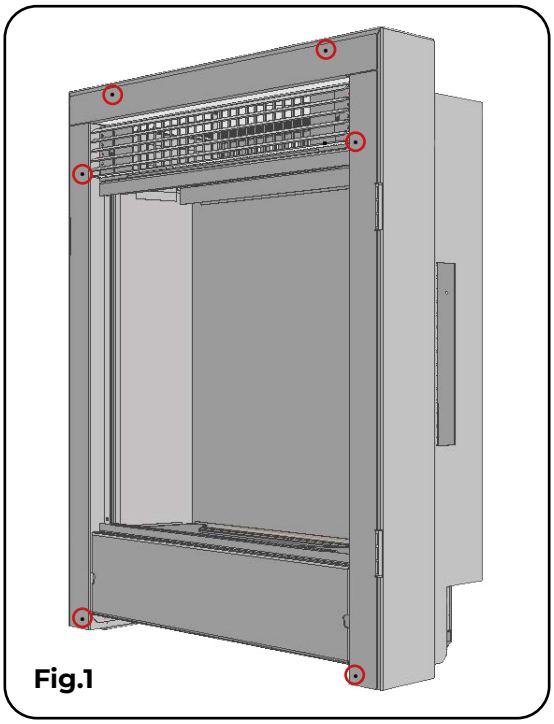

Fig.1

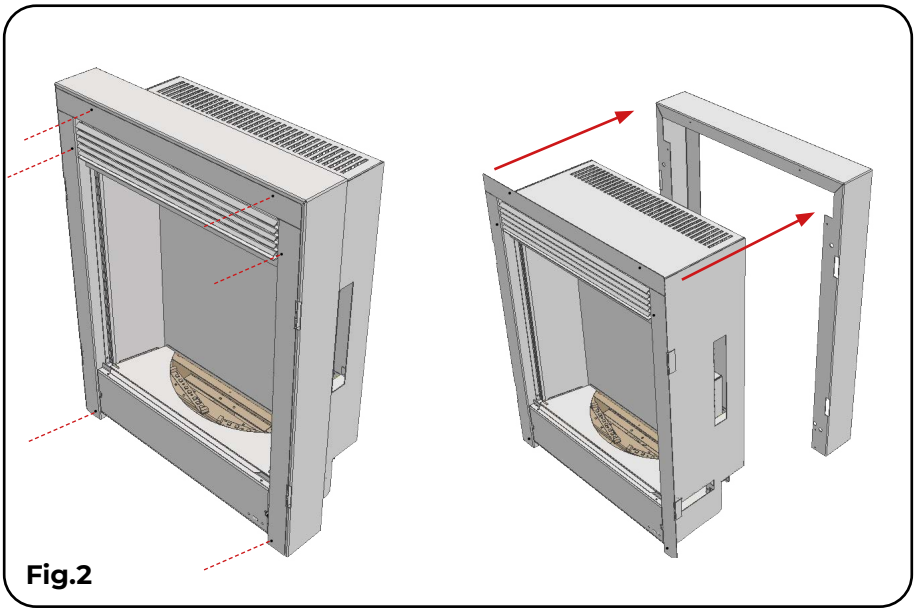

Fig.2

FRONT GLASS REMOVAL - APPLICABLE MODELS

1

Unscrew the two screws, and remove the bottom glass retainer from the appliance.

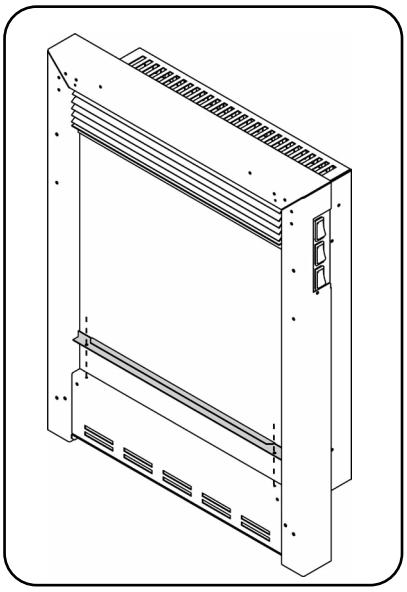

2

The glass can now be removed from the appliance.

To replace the glass, follow the steps in reverse.

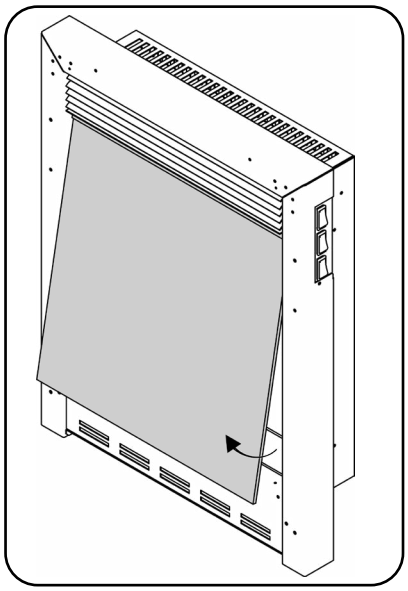

FITTING THE FASCIA

MAGNETS

The following fascias are attached with magnets;

Colorado / Kepler 22 / Abberley / Stanford / Argenta / Stanway

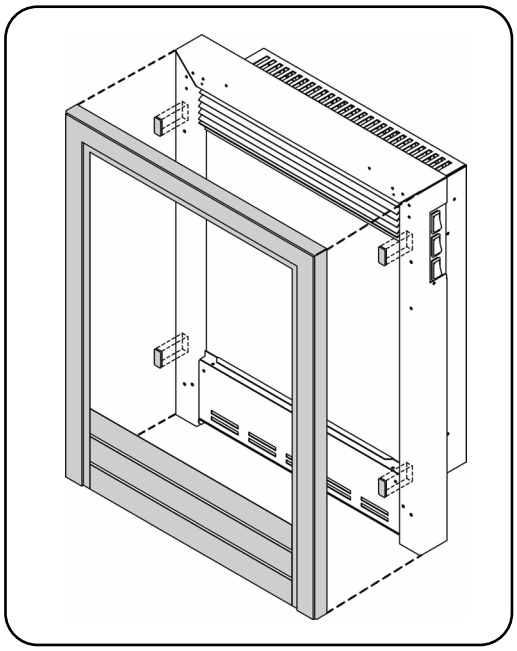

SCREWED

The Brooklyn and Detroit fascia are attached using screws. There are 4 screw holes located in the outside plaster kit which line up with 4 holes in the rear of both the Brooklyn and Detroit fascias. Offer up the fascia, and secure in place by screwing the fascia to the fire.

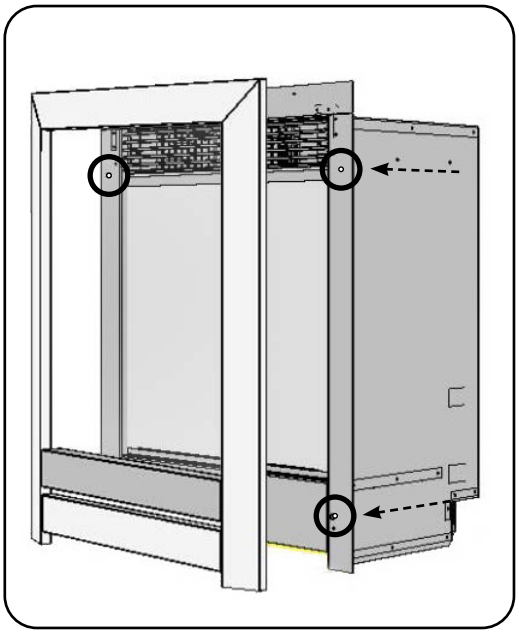

FITTING THE FASCIA

SLOTTED

The Strellar cast fascia is secured to the front of the appliance with two top mounted clips and a mounting bracket. Line up the two clips with the top of the mounting bracket and slot them down into the bracket.

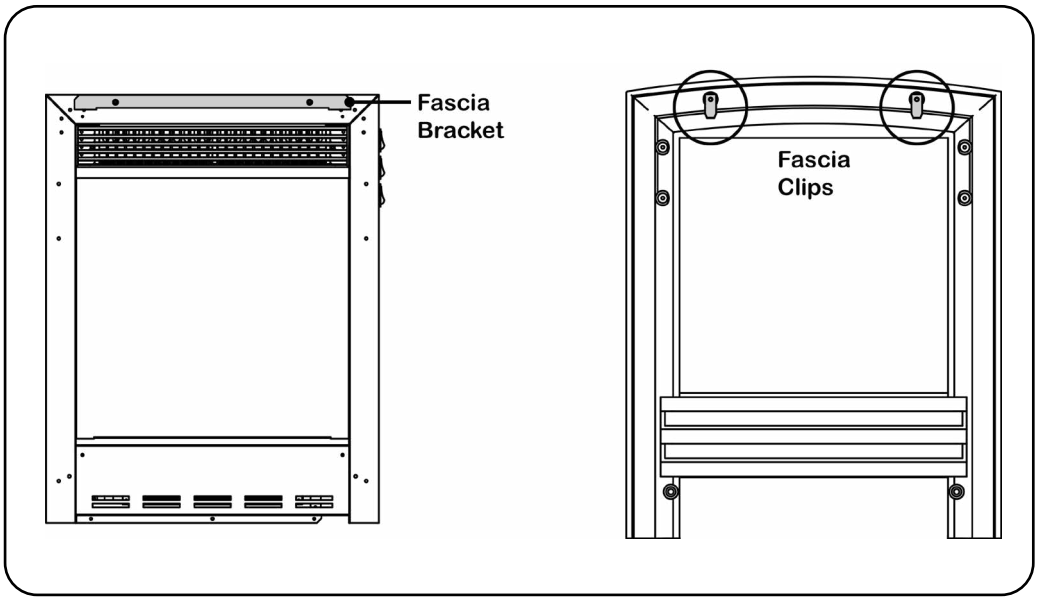

The cast frame can now be screwed to the appliance using the 2x screws supplied. The screw holes are located at the lower part of the frame. Once these are fitted, the fret panel can be fitted in front of this.

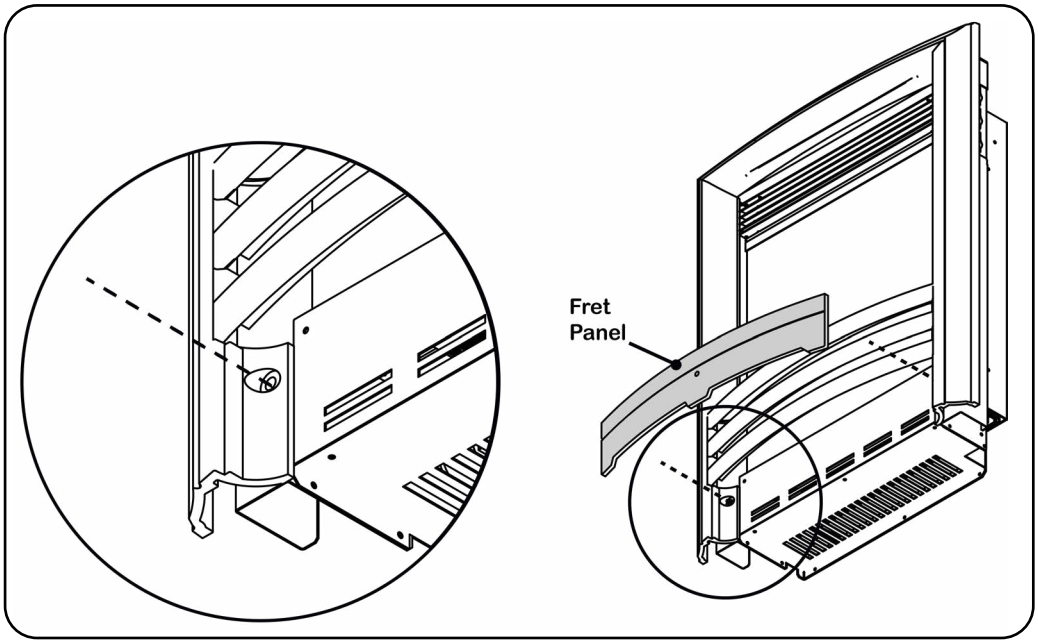

MANUAL CONTROLS

All our inset models are designed to be fitted into a standard 16” wide x 22” high opening. Before starting the installation check the dimensions of both the appliance and your opening to ensure that they align well.

Please note, if you are installing into an existing chimney breast it is imperative that the flue is adequately blocked off.

You can operate your appliance using the manual rocker switches located on the right hand side. Please note there is no manual dimmer control.

- To turn on the appliance and activate the **Flame Effect**, press the top rocker switch to the **I/On** position.

- To activate the heater at **Low Heat**, press the middle rocker switch to the **I** position. To deactivate, switch the rocker switch back.

- To activate the heater at **High Heat**, press the bottom rocker switch to the **II** position. To deactivate, switch the rocker switch back.

- To turn off the **Heater** and **Flame Effect**, press the top rocker switch to the **OFF** position.

TROUBLESHOOTING GUIDE

FAULT	POSSIBLE CAUSE	SOLUTION
No power to appliance	Power lead has become disconnected.	Ensure the power lead has been adequately plugged in.
	ON/OFF switch not turned to the **ON** position.	Double check the position of the **ON/OFF** switch.
	Fuse blown.	Check fuse box. Always consult a qualified electrician when dealing with the fuse box.
LED lighting not working/ partially working	Loose connection or disconnected wire.	Check relevant LED connections.
	LED shorting out.	Locate short and ensure strip is not touching metalwork. Replace LED strip if necessary.
	LED blown.	Replace LED strip.
	Blown driver on PCB board.	Replace PCB board.
Heater blowing cold air	Fan clogged.	Heater fan requires cleaning.
	Faulty element.	Element will need to be replaced.
	Not enough air clearance above the heater.	Required clearance has not been adhered to - **2" (50mm).**

FAULT	POSSIBLE CAUSE	SOLUTION
Noisy heater	Fan unbalanced.	Ensure fan has been attached to housing correctly.
	Fan catching on housing while turning.	Adjust fan to prevent catching on the case.
	Fan has come loose from cradle.	Tighten fan cradle or screws holding fan onto cradle.
Connectivity/ Poor WiFi signal	Router may be too far away from unit.	Re-position the router if possible or install WiFi booster to improve signal reach.
	Internet may be operating on 5hz frequency.	Contact your internet provider to change the frequency to 2.4hz to improve range.

WARRANTY

Evonic Fires 5-year warranty – 1 year parts & labour + 4 years parts supplied.

The above warranty terms and conditions, as of **1st May 2022**, are applicable for all relevant products purchased after this date. Appliances despatched prior to this date will have an alternative warranty as set out within the Installation and User Instructions that was supplied with the product, this was usually a standard 2-year warranty.

To receive your Extended Warranty your Evonic Fires product must have been purchased from an authorised stockist within our Retailer Network and your warranty registered with Evonic Fires through the online form - **evonicfires.co.uk/register-your-product**. The commencement date for the warranty period is the date of purchase. **Your product must be registered within 30 days of purchase to secure the additional warranty term.**

The product must be adequately serviced and maintained. Evonic Fires provide maintenance call outs at a cost, and information on this can be obtained by contacting our head office. Please see your Evonic Installation Instructions for further information on how to service and maintain your appliance.

During your extended warranty period, only parts supplied or authorised by Evonic Fires can be used to repair your fireplace, and these spare parts can be obtained by contacting our service department at **service@evonicfires.co.uk** or calling **01789 263868**.

Consumable items such as glass, screens, LED's, LED boards, filters and power supplies which are either subject to normal wear and tear or parts that require replacement in connection with normal maintenance are not covered within the extended warranty. These items are covered for the first 12 months.

To make a warranty claim, evidence must be supplied to our service department in the form of pictures, videos, or both. Failure to supply evidence to support your warranty claim may invalidate or delay the claim. Any visit by an Evonic Fires engineer will incur a service charge after the first year. We will not accept or reimburse the cost(s) of any third party who undertakes any work carried out on the product or fits parts, unless we have approved such work in advance of it being carried out.

WARRANTY EXCLUSIONS AND LIMITATIONS

The Evonic Extended Warranty does not cover:

1. Damage resulting from installation and usage where the appliance has not been installed or used in accordance with the CK Fires Ltd installation and operation instructions, or if the installation does not conform to local building, fire, and safety regulations.

2. Issues with mains/spur connections of power supply.

3. Damage resulting from the product not being adequately maintained. (Please see your CK Fires Ltd Installation and Operating Instructions for further information on how to service and maintain your appliance).

4. Damage caused by unauthorised modifications, use or repair.

5. Damage or defects caused by the product being stored in a damp, unheated environment.

6. Consequential loss (to the extent permitted by the law) relating to other associated products that have not been supplied by CK Fires Ltd.

7. Consequential loss (to the extent permitted by law) related to decorations, furnishings, or other household assets.

8. Removal and re-installation costs.

WARRANTY EXCLUSIONS AND LIMITATIONS

Repaired or replaced products are covered only for the remainder of the original warranty period. In the event of a claim being made, this must be reported to your retailer or CK Fires Ltd within 14 days of the fault occurring/being noticed. In the event of a product fault occurring during the warranty period years 2-5, CK Fires Ltd will send the appropriate component or goods necessary to rectify the fault, free of charge.

Nothing in the Extended Warranty shall make CK Fires Ltd liable for any or special, incidental, or consequential damages, injury to persons or property, or any other consequential loss beyond the consumer's statutory rights. The liability on these issues is covered by our Terms and Conditions of Sale.

CK Fires Ltd total liability extends only to the purchase price paid for the goods, except where such a limitation is prohibited by statute. CK Fires Ltd, in the event of a warranty claim, reserves the right either to replace the goods in question or to refund the purchase price of the goods. For product sold outside the UK and Ireland, UK law will prevail.

The Evonic Fires Extended Warranty does not affect your statutory rights.

REGISTER YOUR EVONIC FIRE

By registering your product on our website you ensure 4 years parts only cover on top of your standard one year warranty. Scan the QR code to take you directly to the registration page and secure your extra cover.

REPORT A FAULT

If you have any difficulties or problems with your appliance then please get in touch so that we can assist you. Please scan the QR code to be taken to our websites Report a Fault page, we will then be in touch with you shortly.

CK Fires Ltd / Evonic Fires

1 Evonic House, Clifford Park, Clifford Lane,
Stratford-on-Avon, CV37 8HW
Tel: +44 (0)1789 263868 **Fax:** +44 (0)1789 293080
Email: sales@evonicfires.co.uk

www.evonicfires.co.uk

Follow us on: