evonicfires

SUITES

INSTALLATION MANUAL

Cubbington **1350**	e-lectra **1350**	Ellipse
Cubbington **1500**	e-lectra **1500**	Bergen
Heathcote **1350**	Espire **200**	Gilmour **10**
Heathcote **1500**	Espire **175**	Gilmour **7**
Ledbury **1350**	Espire **150**	Gilmour **6**
Ledbury **1500**	Imperium	Compton **1000**
Welford **1350**	Crenshaw	Compton **2**
Welford **1500**	Inglewood	Empire **2**

CONTENTS

Health and safety....4
Checks before installation – All models....5
Attaching the woodwork....6
Attaching the side wings....10
Floor-based installation....11
Wall mounting....12
Removing the side glass....13
Removing the front glass....14
Control Methods....15
E-Smart App Setup....16
Using the E-Smart App....18
Control Overview....19
Programming the Timer....20
Remote control....21
Connection Problems....22
Retro-fitting the Remote Control....23
Connecting to Amazon Alexa....24
Connecting to Google Home....26
Commands for Voice Control....28
e-lluminate lighting setup....29
Warranty....30

The following materials and components should be disposed of in accordance with the below table.

Metal - Steel or cast iron	Can be taken to a local recycling centre for reuse to reduce waste going to landfill.
Glass & Screens	Can be taken to a local recycling centre for reuse to reduce waste going to landfill.
Vermiculite	Non hazardous material. Vermiculite can be crushed up and used for plant bedding and ash used for composting or disposed of at a local recycling centre for reuse to reduce waste going to landfill.
Electrical components - Fans, heater elements, PCB's, Power pack's, LED's	Dispose at a local recycling centre In accordance with latest WEEE directive.
Log fuel effects	These logs contain refractory ceramic fibre materials which requires disposal in accordance with WEEE legislation.
Natural Wood	Can be taken to a local recycling centre for reuse to reduce waste going to landfill.

EU DIRECTIVES

All Evonic Fires products meet the requirements of the EC Directives.
These directives have been met by compliance with the following standards:

EU 2011-65/EU 2015/863 Restriction of Hazardous Substances.

References to the relevant designated standards used:

EN 55014-1:2006 + A1:2009 + A2:2011 Electromagnetic Compatibility.

EN 55014-2:2015 Electromagnetic Compatibility.

EN 61000-3-2:2014 Electromagnetic Compatibility (EMC). Limits. Limits for Harmonic Current Emissions.

EN 61000-3-3:2013 Electromagnetic Compatibility (EMC). Limits. Limitation of Voltage Changes, Voltage Fluctuations and Flicker.

EN 60335-1:2012 + A11:2014 Household and similar electrical appliances - Safety

EN 60335-2-30:2009+A11:2012 Household and similar electrical appliances. Safety. Particular requirements for room heaters

UKCA STANDARDS

All Evonic Fires products are in conformity with the relevant UK Statutory Instruments (and their amendments).

2016 No. 1101 The Electrical Equipment (Safety) Regulations 2016

2016 No. 1091 The Electromagnetic Compatibility Regulations 2016

2012 No. 3032 The Restriction Of Use Of Certain Hazardous Substances In Electrical And Electronic Equipment Regulations 2012

IMPORTANT INFORMATION AND HEALTH & SAFETY

When using electrical appliances, basic precautions should always be followed to reduce the risk of fire, electric shock, and injury to persons, including the following:

- Read all of the instructions carefully before using the appliance, only use this appliance as described in this manual. Any other use not recommended by the manufacturer may cause injury to persons, or damage to the appliance.
- Remove all packaging and dispose of it at an appropriate recycling facility.
- When transporting or storing the appliance and power lead, keep in a dry place, away from excessive vibration and store so as to avoid damage.
- This fireplace is hot when in use. To avoid burns, do not let bare skin touch hot surfaces. The trim around the heater outlet becomes hot during heater operation. DANGER: High temperatures may be generated under certain abnormal conditions.
- Do not install this appliance immediately in front of a fixed socket outlet.
- Do not install this appliance in the immediate surroundings of a bath, shower, swimming pool or any other area where the appliance could come into contact with water or humidity, e.g. a bathroom.
- Do not use in areas where gasoline, paint, or any flammable liquids are used or stored.
- This appliance is only suitable for indoor use, do not use outdoors.
- Do not cover the appliance, or let the air inlet/outlet to be obstructed in any way as it may overheat.
- Keep the power lead away from hot surfaces and the heater outlet. Do not route the power lead in front of the appliance, or under any carpets or rugs. Do not allow the power lead to be coiled up once installed, as this can cause overheating.
- This appliance must be firmly fixed to or recessed into, a flat internal wall.
- A maintenance hatch must be installed into the surrounding installation to allow future access.
- Always use a certified electrician should new circuits or outlets be required. And always use properly grounded, fused and polarised outlets.
- Where the power lead passes through any masonry wall, stone surround etc. ensure that suitable rubber bushes are fitted at any possible wear points.
- If the power lead is damaged do not use the appliance until it has been replaced.
- Do not use any external switching device, timers, or extension leads. Do not connect the appliance to a circuit that is frequently switched on and off by the utility.
- In the event of a malfunction, switch off the appliance, and disconnect it from the mains power supply. Have the appliance inspected by a certified electrician before reusing.
- Do not use the appliance if it is damaged. In the event of any damage to the appliance, please contact the retailer from whom the appliance was purchased.
- Any repairs must only be performed by a certified electrician.
- Extreme caution is necessary when any heater is used by, located near children or people of reduced mobility, and whenever the unit is left operating and unattended.
- Young children should be supervised to ensure that they do not play with the appliance.
- Disconnect from the power supply before performing any cleaning, maintenance or relocation of the unit. Do not use steam cleaners, or aerosols near the appliance.
- Do not burn wood or anything else in this appliance.
- Do not strike the glass. The glass used is toughened safety glass, if broken it will shatter into small chunks which are less likely to cause injury.
- Do not drill or screw any new holes into the appliance.

CHECKS BEFORE INSTALLATION - ALL MODELS

INSTALLATION DO'S AND DONT'S

Before installing the appliance please read and take into account the following important requirements;

- Consult a qualified professional to check the structure of the installation site.
- If installing into an existing chimney, make sure to adequately block off the flue.
- The appliance must never be installed in front of an electrical socket.
- The appliance must not be installed anywhere that it may come into contact with water, i.e. a bathroom.
- Do not wet plaster directly onto the appliance.

CHECKS BEFORE INSTALLATION

We recommend turning on the appliance before installation, connect the appliance to a power source using the provided electrical lead, and depress the right side of the **ON/OFF** switch.

Remove the electrical lead from the wall and continue with the installation.

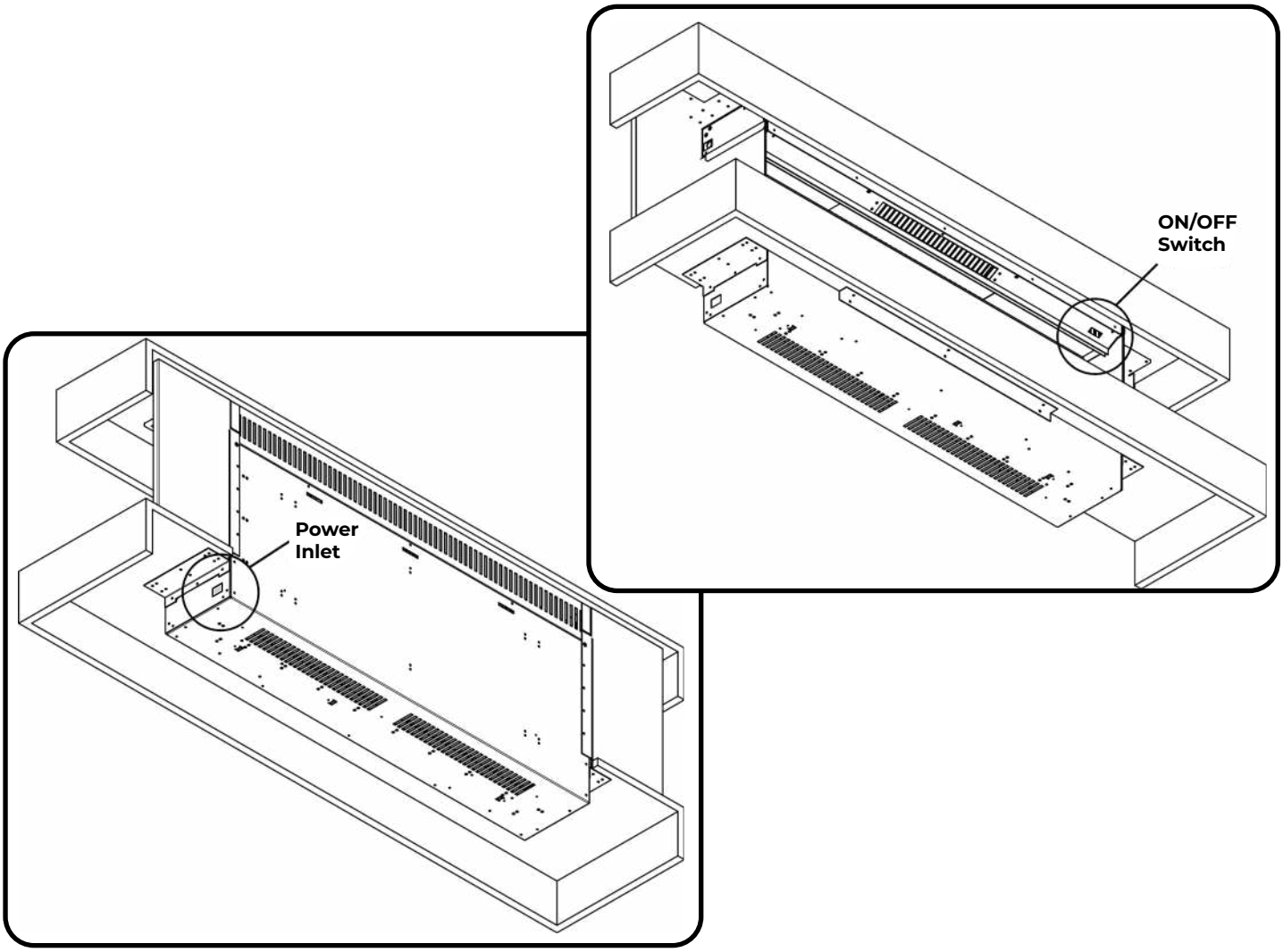

ATTACHING THE WOODWORK - APPLICABLE MODELS

All the suite models that we ship either have the woodwork already attached, or on larger models the woodwork will be packed seperately from the fire and require attaching by the installer or customer. Detailed below you will see information on how your suite should arrive to you. We supply wall mounting brackets and mirror (180°)brackets with all of our suites.

If your woodwork arrives seperately, then follow the step-by-step guide on how to attach. If your woodwork has already been attached, then you can continue to the wall-mounting or riser installation section.

MODEL	WOODWORK ATTACHED	WOODWORK SEPARATE	180° BRACKET SUPPLIED
Heathcote FS **1500**	✗	✓	✓
Heathcote FS **1350**	✗	✓	✓
Heathcote **1500**	✗	✓	✓
Heathcote **1350**	✗	✓	✓
Welford FS **1500**	✗	✓	✓
Welford FS **1350**	✗	✓	✓
Welford **1500**	✗	✓	✓
Welford **1350**	✗	✓	✓
Cubbington **1500**	✗	✓	✓
Cubbington **1350**	✗	✓	✓
Ledbury **1500**	✗	✓	✓
Ledbury **1350**	✗	✓	✓
e-lectra **S 1500**	✓	✗	✓
e-lectra **S 1350**	✓	✗	✓
Espire **200**	✗	✓	✓
Espire **175**	✗	✓	✓
Espire **150**	✓	✗	✓
Imperium	✓	✗	✓
Crenshaw	✓	✗	✓
Inglewood	✓	✗	✓
Ellipse	✗	✓	✓
Bergen	✓	✗	✓
Gilmour **10**	✓	✗	✓
Gilmour **7**	✓	✗	✓
Gilmour **6**	✓	✗	✓
Compton **1000**	✓	✗	✓
Compton **2**	✓	✗	✓
Empire **2**	✓	✗	✓

ATTACHING THE WOODWORK - APPLICABLE MODELS

1

On the bottom woodwork section of the suite, unscrew and turn the mirror brackets on the rear 180°, so they are pointing upwards. Then on the top woodwork section, unscrew and turn the mirror brackets 180° so they are pointing downwards.

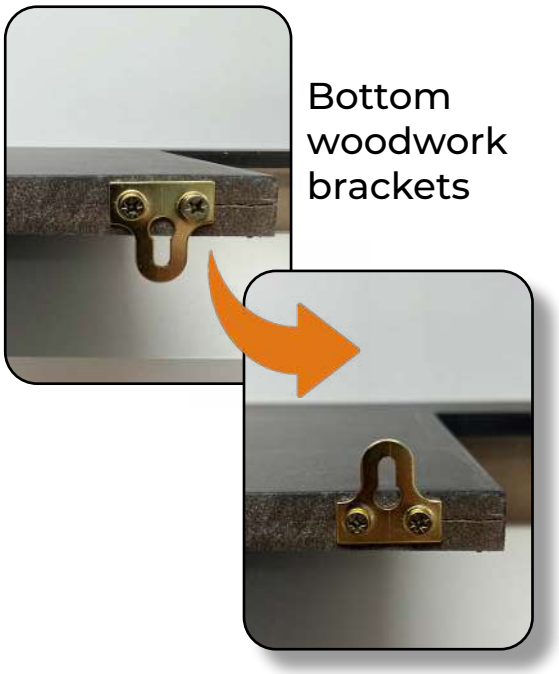

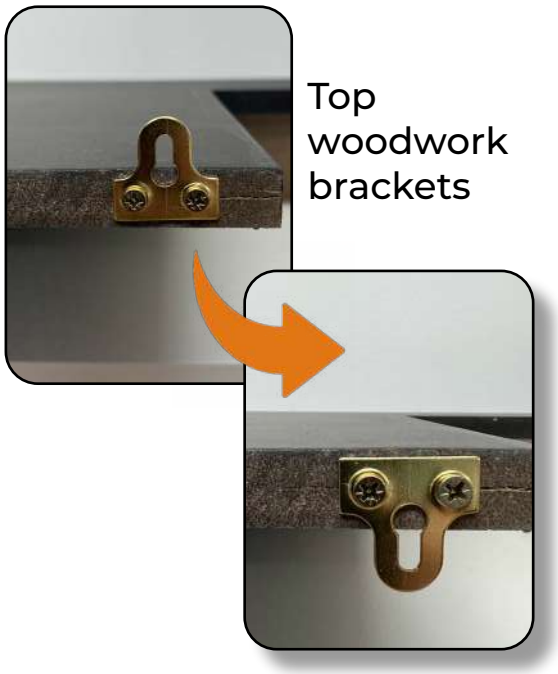

2

The fire will have come with 2 bottom brackets already attached, and you can now slide your bottom woodwork section onto these brackets. The top woodwork section sits on top of the fireplace itself and rests on the plaster kit, and the bottom woodwork section will fit in just below the plaster kit.

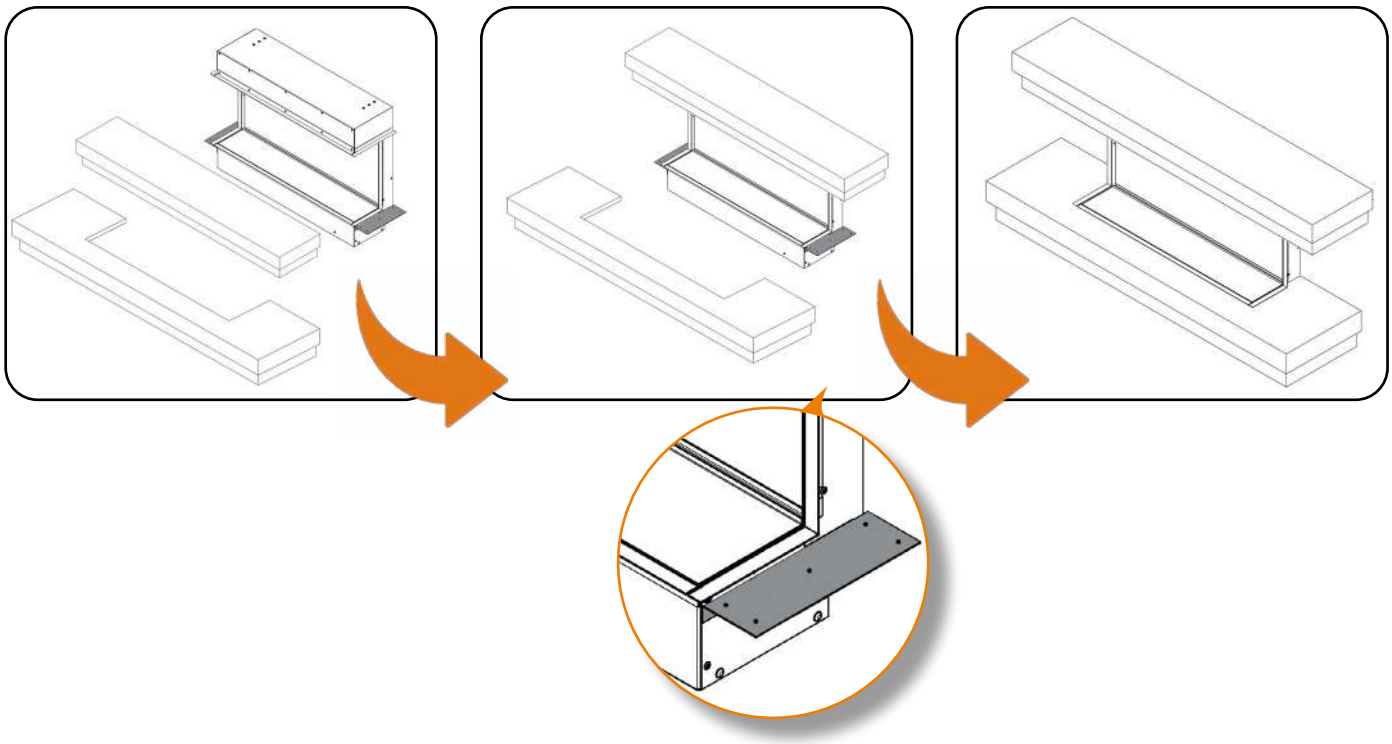

ATTACHING THE WOODWORK - APPLICABLE MODELS

3

Once the appliance has been hung onto the wall bracket (Page 10), you can secure your woodwork in place by screwing through the mirror brackets into the wall using the appropriate fixings. There will be 4 woodwork brackets that need attaching. These will be hidden once you attach your side wings.

PLEASE NOTE: The mirror brackets are to provide extra support for the woodwork only. The weight of the product must be taken by the wall bracket on wall-mounted models, or by the riser on floor-based units.

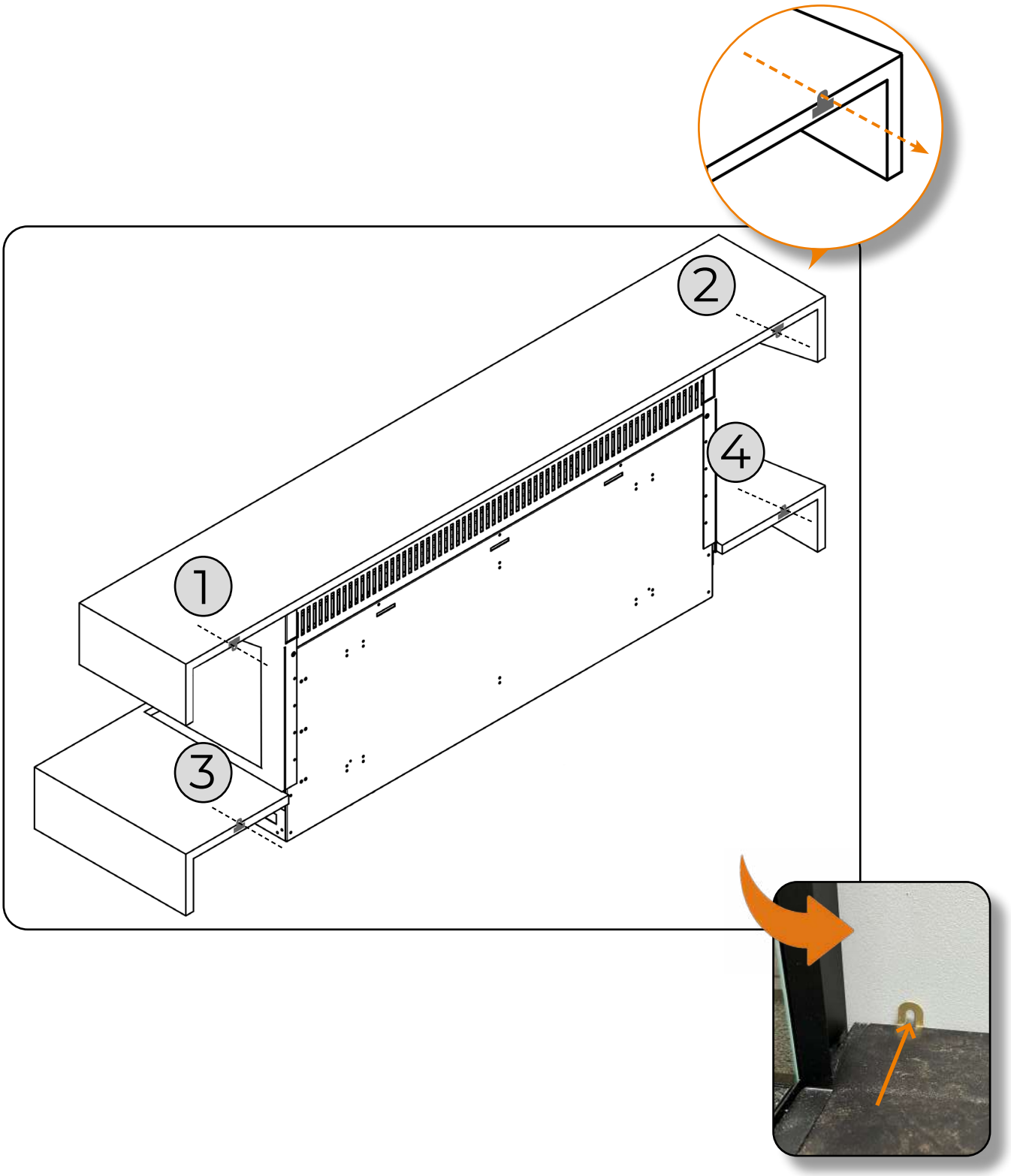

ATTACHING THE SIDE WINGS

On some models, your side wings will come seperately from the fire and can be attached simply by joining the 2 velcro strips. One will be located on the side of the fire (Fig 1.) and the other will be located on the edge of the side panel (Fig 2.). Simply un-peel the velcro cover and attach as below.

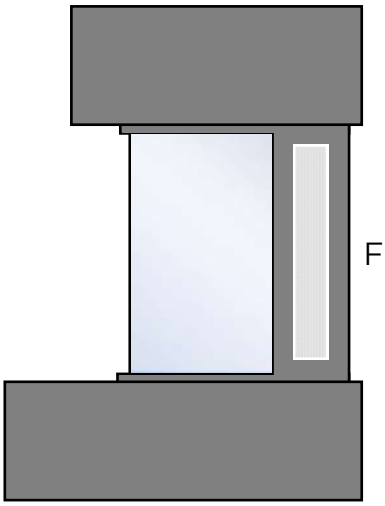

Fig 1.

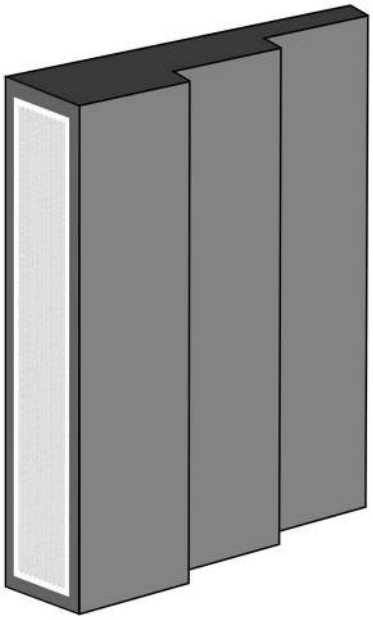

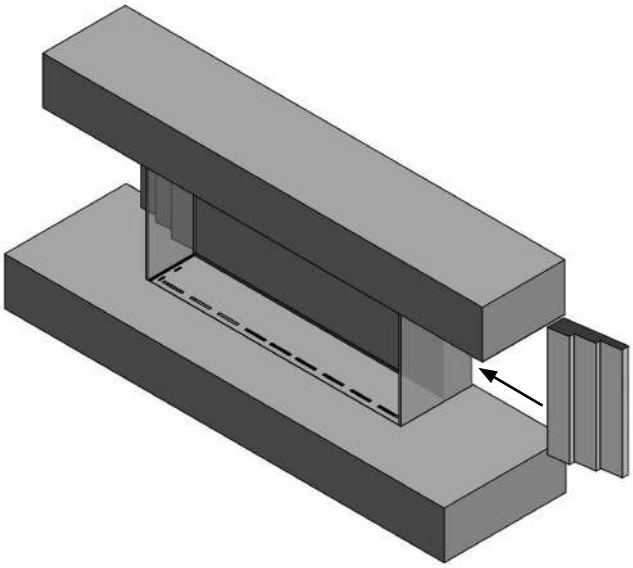

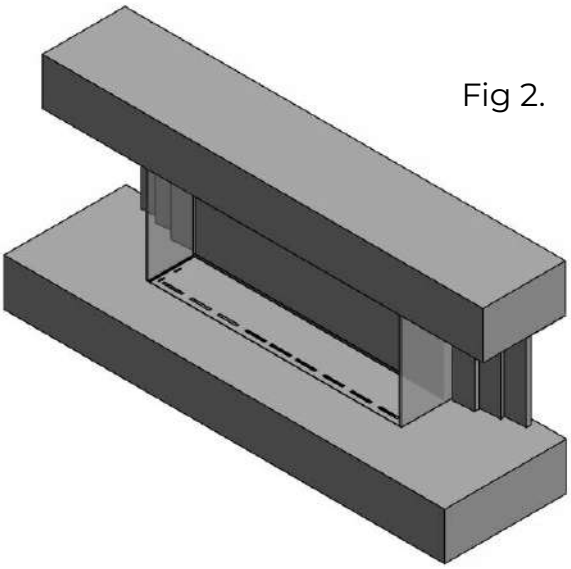

Fig 2.

FLOOR-BASED INSTALLATION (WITH RISER)

1

Identify where you want to position your fire in a room. Once you have done this, slide your riser into position. You may want to measure the width of both the suite and the riser so you can identify the centre point of the fireplace.

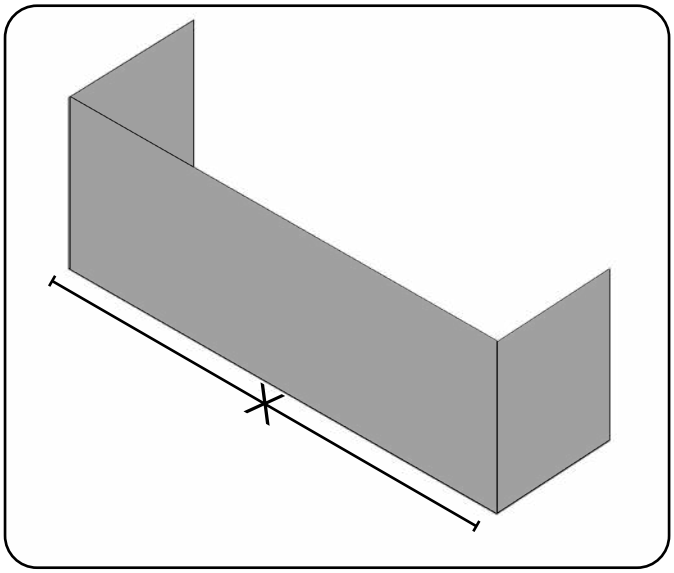

2

Carefully lift your fireplace and insert it into the riser. This will require a minimum of 2 people.

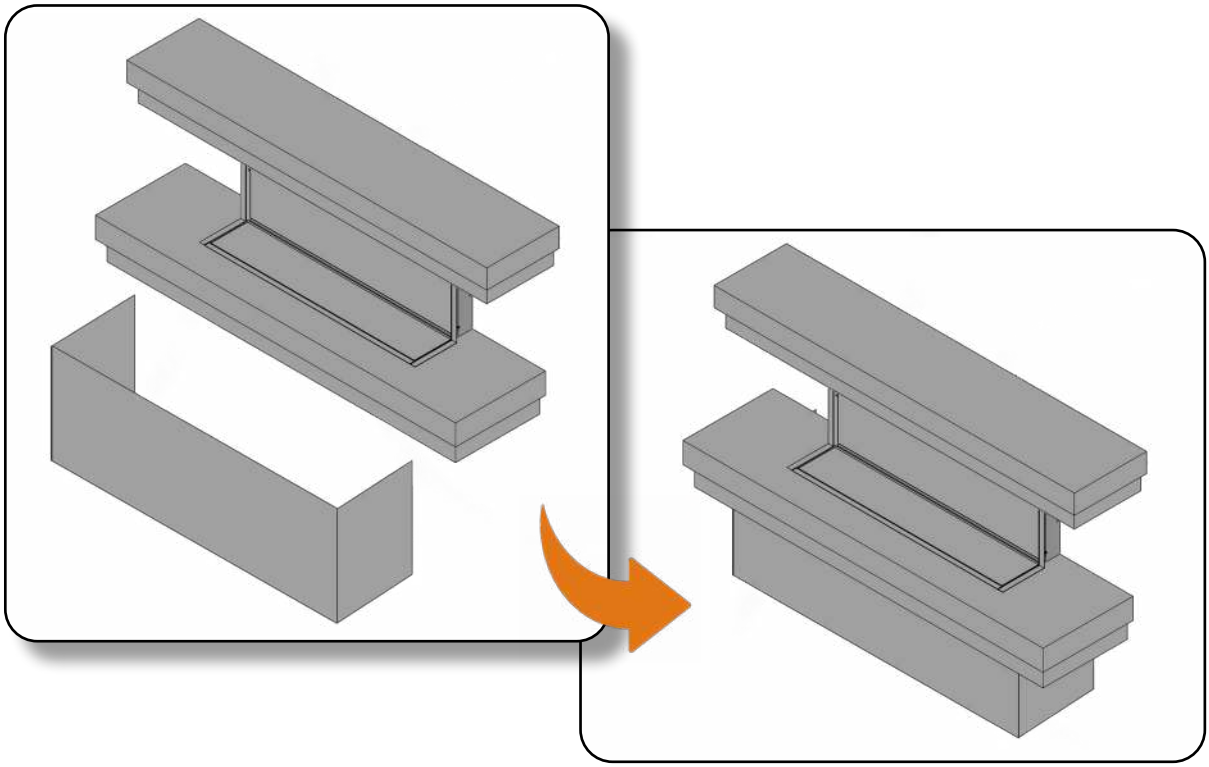

WALL-MOUNTING - ALL MODELS

1

Remove the two bottom mounted transit brackets, you won't need these for installation. Then screw on the IEC Clip to the bottom back of the case, with the two provided screws.

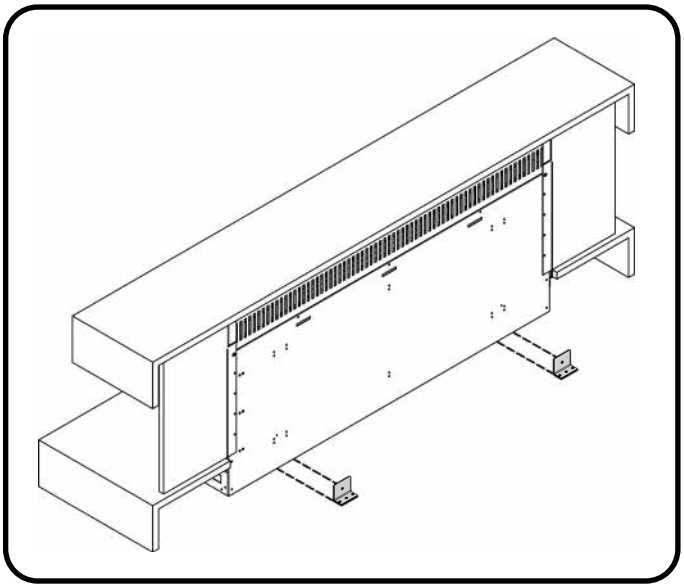

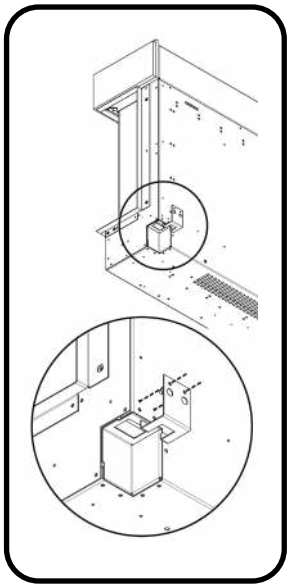

2

Determine the finished height and position that you want the appliance to be located. Then secure the wall bracket to the wall in the position you need using the wall plugs and screws provided. If you're not securing the appliance to a masonry wall you will need to use the appropriate fixings.

You can now hang the appliance on the wall by slotting the tabs of the wall bracket into the slots on the back of the appliance.

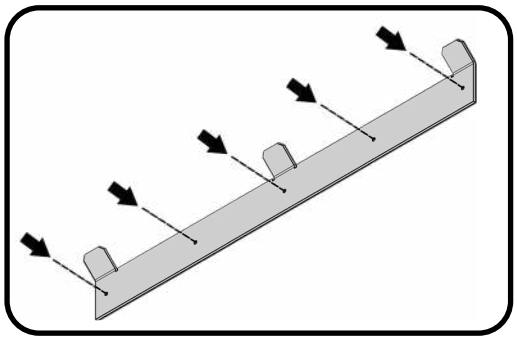

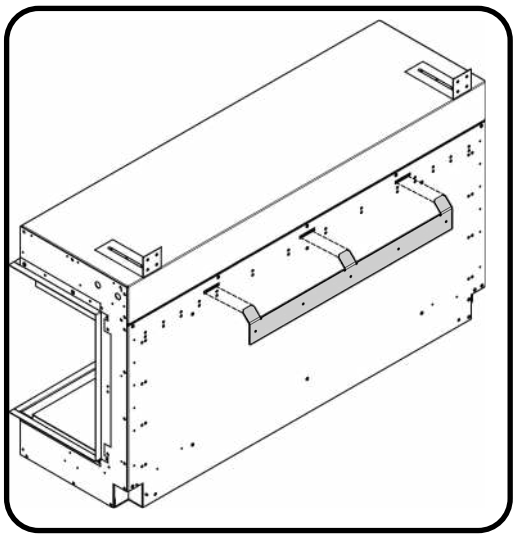

REMOVING THE SIDE GLASS PANELS - APPLICABLE MODELS

1

Unscrew and remove the top glass retainer panels.

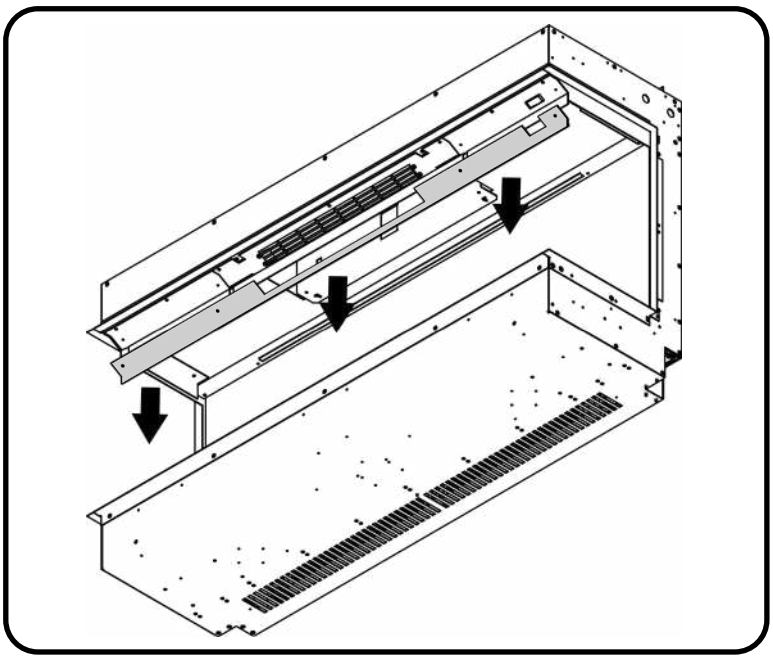

2

Slide out the side glass piece(s). Depending on the model, you may have to angle the side glass.

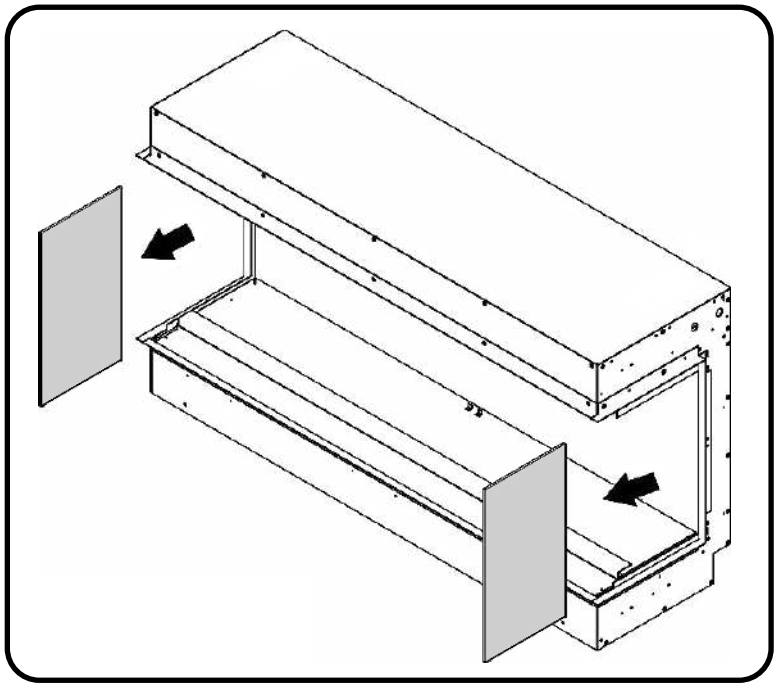

INSTALLING THE FRONT GLASS PANEL - APPLICABLE MODELS

1

On 1800mm and 2400mm models, apply the suction cup to the glass and position the bottom edge of the glass first, then pivot the glass into the appliance. If not using a suction cup, carefully hold the glass on either end and follow the same process. 2 people may be required for this to ensure the glass is carefully supported at all times.

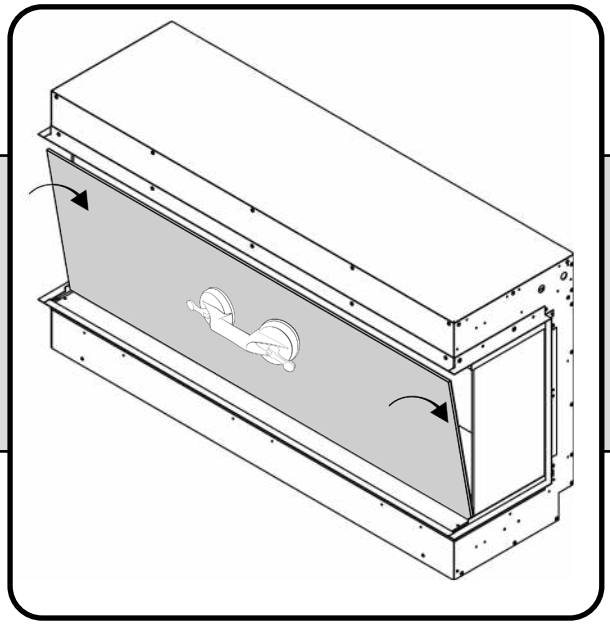

PLEASE NOTE:

The suction cup is provided to assist in moving the glass, **NEVER** as the sole support for the glass. Always support the glass throughout the entire process until fully fitted in place.

2

Then replace the top glass retainer bar.

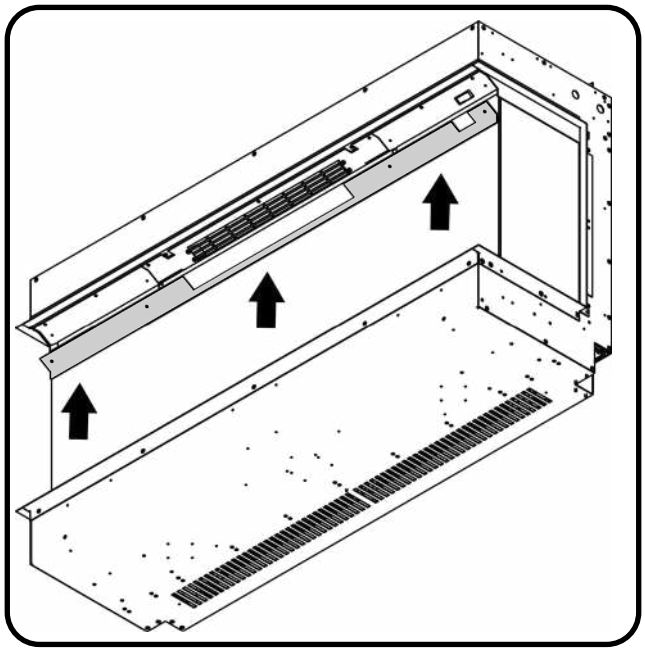

CONTROLLING YOUR FIRE

There are two ways to control all the features of your Evonic appliance - **remote or e-smart App**

Our remote handset comes automatically paired and ready to operate straight out of the box. If you choose to control your appliance via the e-smart app, your internet router and smart device should meet the following minimum requirements -

Wi-Fi Router

- Compatible with IEEE 802.11n/g/b
- WPA2 encryption
- Radio frequency: 2.4GHz band
- Wireless auto channel: auto search for wireless LAN radio channel free of interference
- Support for the User Datagram Protocol (UDP)
- The minimum distance from your internet router to the fire should be 70cm

Smart Device

- Minimum device requirements IOS 8.0 or Android 10

E-SMART APP SETUP

To begin using the app you first need to pair your appliance to the app, we have created a video on our Youtube channel to guide you through the process of pairing your appliance to your smart phone or tablet. Scan the QR code to be taken to the video and get started. Alternatively follow the step-by-step guide below.

1

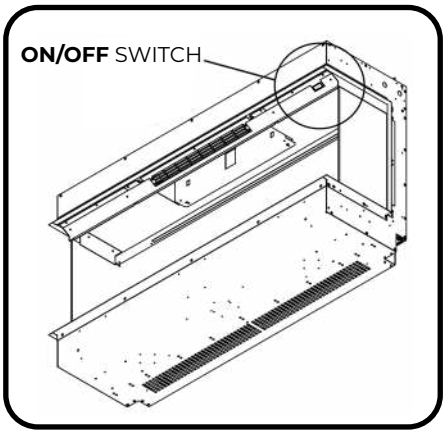

Make sure that your fire is plugged in and the switch is on. Then turn on your fire by pressing the ON/OFF switch to the 'ON' position.

2

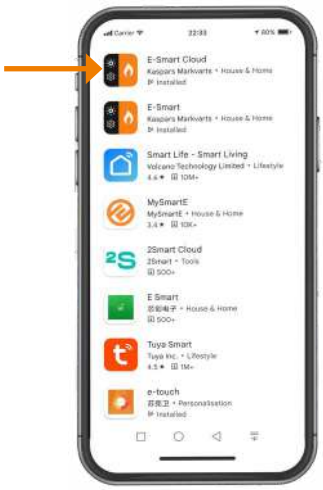

Download the **E-Smart Cloud** app from the Apple Store, or Google Play Store.

3

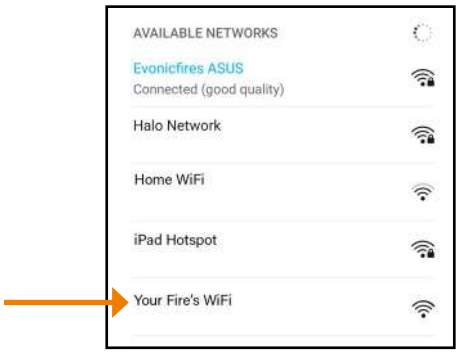

Open the Settings panel on your device and connect to the fire's wireless connection. The name of the fire's wi-fi will vary depending on the model.

4

Open the E-Smart app on your device

5

Open the settings panel on the app's Home Screen.

6

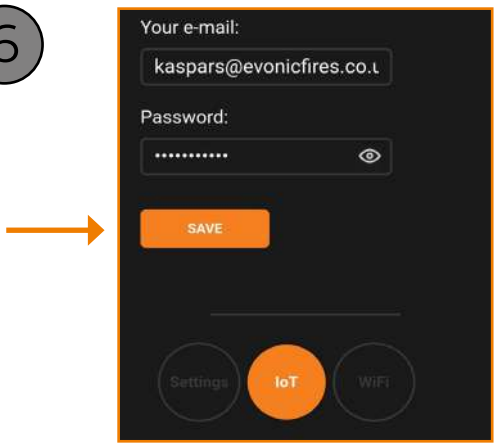

Scroll down to the 'IoT Registration' section and fill in your email address and create a password. Press 'Save'. Then select the grey wi-fi button.

7

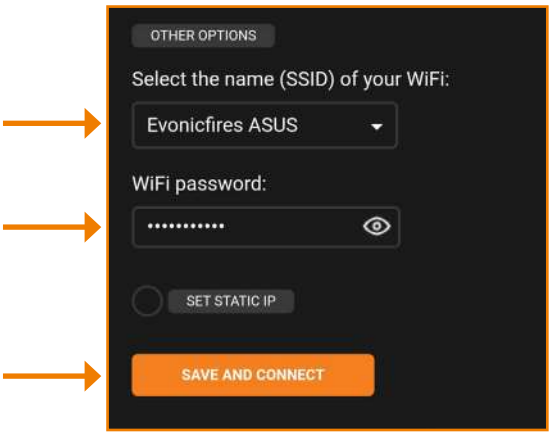

Select your router from the drop down box, and enter your router's password. Press the eye icon to double check for mistakes. Press 'Save and Connect'. Only select Static IP if advised by an IT professional.

8

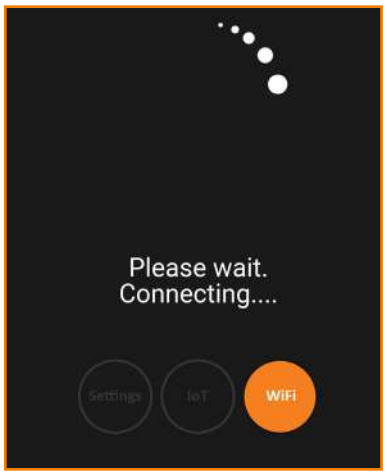

The pairing process between your device, the fire, and your router will now take place. This may take a few minutes, and when the app shows 'Redirect' you may see the lighting on your fire change colour. This is completely normal. To complete the setup, turn your fire off then back on.

USING THE E-SMART APP

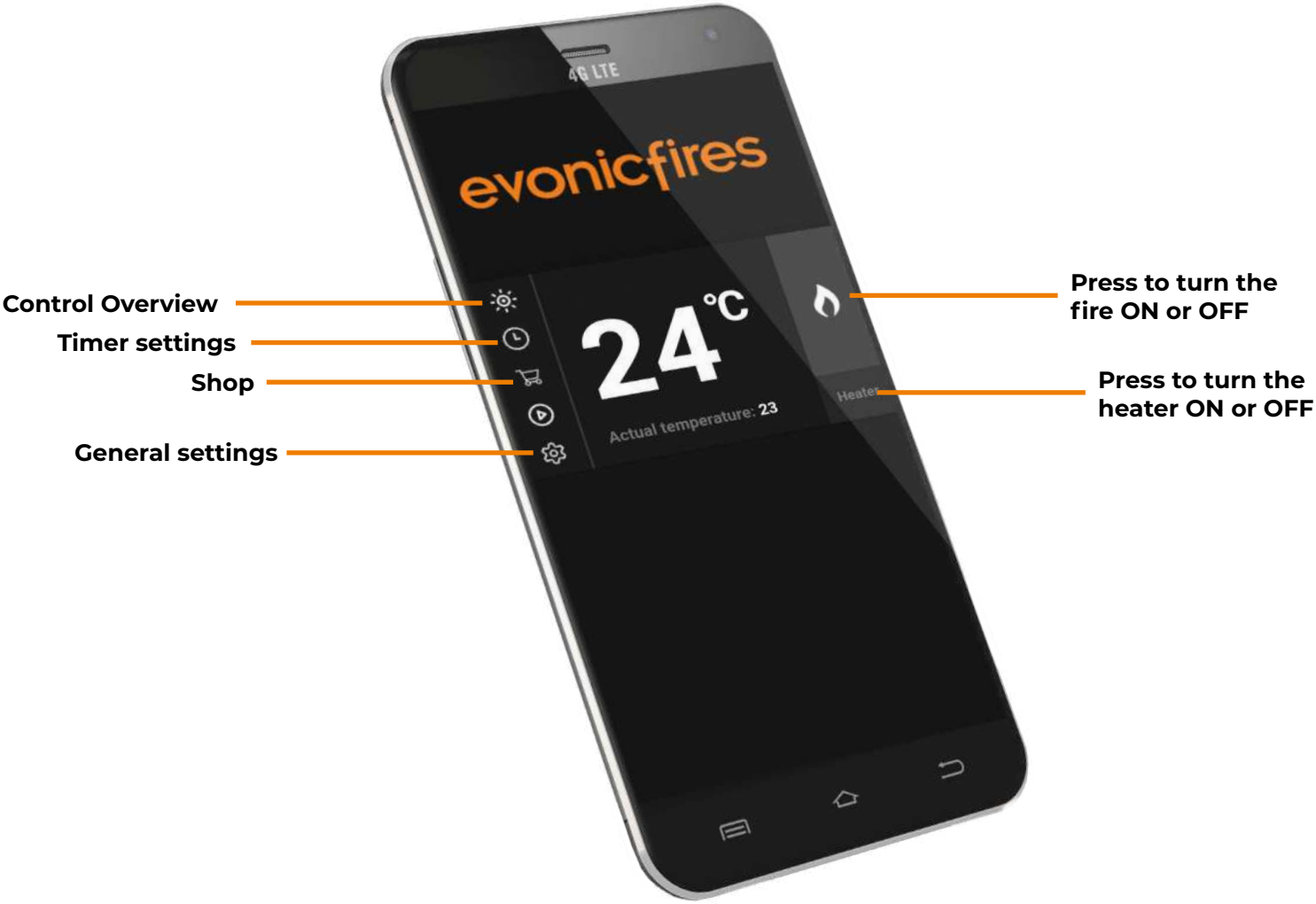

E-SMART APP SETUP

On the Home Page of the E-Smart Cloud App you can see the name of your fire, the chosen temperature, and the actual temperature. On the left hand side you can select the timer, shop, and app settings. On the right hand side you can turn the lights in the fire on and off, and also turn the heater on and off.

To enter the Control Overview either select the light bulb icon on the top left or the central temperature box.

CONTROL OVERVIEW

To adjust the desired temperature of your fire ensure that the heater is selected on the Home Page in the previous step. Then press, hold, and rotate the temperature dial to set the temperature.

The animation drop down allows you to choose the flame effect for your fire, more flame effects are available to download from our shop on the Home Page. **This is not available on single-colour models**.

The 'Feature lights' button will activate the over fuel-bed lights, if you have a model with tile wings then this button will also turn on the side down-lighters.

By clicking on lighting settings you can adjust the flame brightness by pressing, holding, and sliding the tab at the bottom of the screen. Slide left to lower the brightness, and right to increase the brightness. You can adjust the fuel bed brightness in the same way with the lower tab slider.

To change the speed of the LED flame effect single press the speed setting option, and slide the top dial left to slow it down, and right to increase the speed. Likewise with the fuel bed speed, slide the lower tab left to slow it down and right to increase it.

PROGRAMMING THE TIMER

1

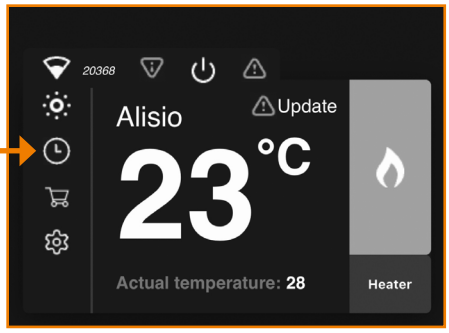

Single press the clock icon on the Home Page to begin programming the Timer.

2

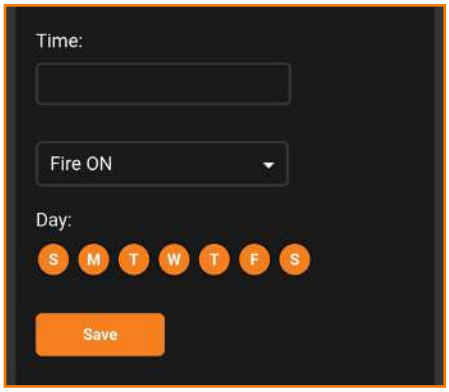

Input your desired time in the Time box, select the action (Fire On/Off/, Heater On/Off) you want. Deselect the day/s you don't want it to apply to, and press the Save button.

3

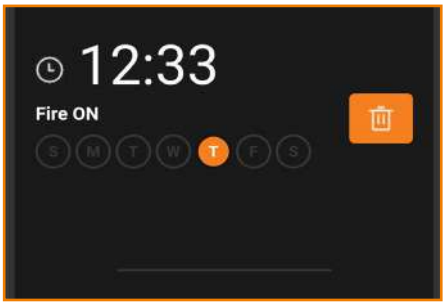

The above screen will now show your set timer. To delete the timer press the bin icon. To add an additional timer scroll down and repeat the process. Press the Back button to return to the Home Page.

UPDATING YOUR FIRE AND LOGGING OUT

Update your fire by clicking on the triangular icon. Do not turn your fire off until it is complete It may take up to 10 minutes to update.

To log out of the e-smart cloud app, on your home screen you need to press the 'log out' icon.

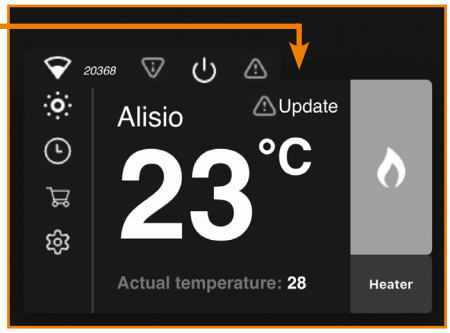

E-SMART REMOTE CONTROL

Top Left - Turn your fire **ON** and **OFF**

Top Right - Turn your feature lights and overbed illumination **ON** and **OFF**

Middle Left - Turn your heater **ON**

Middle Right - Turn your heater **OFF**

Bottom Left - Change the flame animation. **Not applicable with single colour models.**

Bottom Left - Adjust the brightness.

With the remote control the heater is pre-set to **28°**, if you would like to adjust the temperature you need to do this through the app.

The brightness button adjusts the brightness of the fire by **0%**, **25%**, **50%**, and **100%**.

SETTING TIMERS USING YOUR REMOTE

You can set up timers for your appliance easily by using your remote control.

Once you have turned your fire on using the remote, simply press the **Heater ON** icon to set a 15 minute timer. Each click of the **Heater ON** button adds another 15 minutes to the timer and this can be used for a total of 90 minutes (6 clicks).

PROBLEMS CONNECTING

If you are having problems connecting your fire with your device and router please try the following steps to fix the issue.

- Switch fire **OFF**
- Switch wi-fi router **OFF**
- Switch fire back ON (Keeping router **OFF**)
- Open the wi-fi settings on your device - find and select your product / fire
- Open the e-smart App on your device and select the settings icon
- In '**Device Name**', rename your fire (Be sure not to use numbers or spaces when renaming your fire)
- In the Settings menu scroll down to the IoT Registration and check that your email and password are correct. You can click the **eye icon** to help you see any mistakes. Press save.
- Check you have selected the correct network and the wi-fi password entered is correct, you can click the **eye icon** to help you see any mistakes.
- Make sure **'Static IP'** is NOT selected (unless advised by an IT professional). Press save and connect.
- Wait 2 minutes for the fire to try and re-connect. Once this process is finished the App will show the home screen (Page 20).
- Switch your fire **OFF**.
- Switch your wi-fi router back **ON**.
- Switch your fire back **ON**.

If your wi-fi signal is weak, the App will show you a red warning message located on the home screen.

If your problems persist after attempting to re-connect, please contact our service department.

RESETTING YOUR FIRE

If you have entered a wrong email or password during the set-up process, then you may need to reset your fire to factory settings. To do this your fire must be updated to the latest version, you can do this by following the instructions on page 22.

Once your fire is fully updated you can reset it by turning it off and on at the power switch 5 times. Be sure to allow 1 second between each click. There will be an audible beep after this has been done, you can then continue with the set up process on page 18.

RETRO-FITTING THE REMOTE CONTROL

In order to retro-fit your remote on older models, please ensure you follow these steps **BEFORE** you attempt to use the remote control system.

1

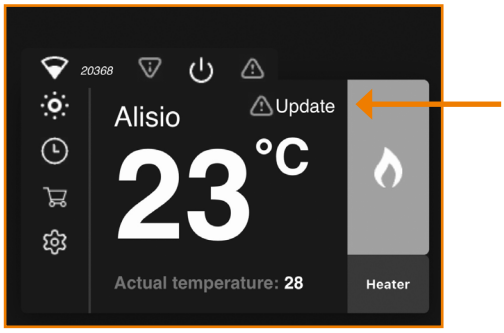

To begin the retro-fit of the remote control, press the 'update' icon on the e-smart cloud app home screen.

2

Once the fire has updated, select the settings icon on the home screen.

3

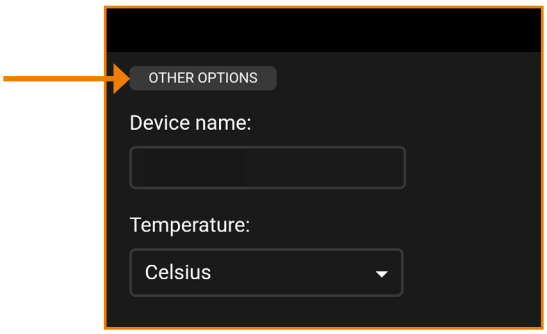

Once the settings panel is open, click 'other options'.

4

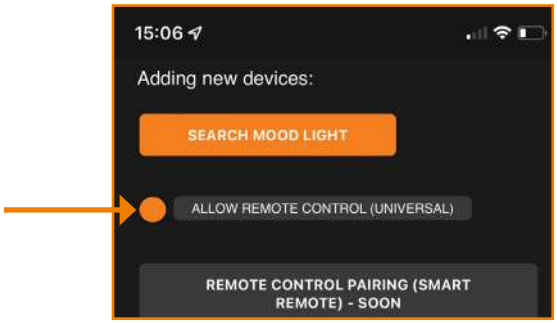

Scroll down to the section that states 'allow remote control (universal)'. Ensure this is highlighted and press save.

5

Press save. You will then hear an audible beep to notify you of the pairing.

6

Turn your fire OFF, then back ON. You remote will now be paired and ready to use.

CONNECTING TO AMAZON ALEXA

1

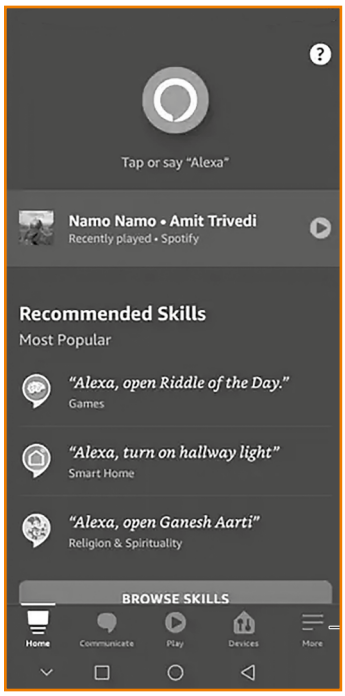

Once your fire is installed, and switched on, download and open the Amazon Alexa app. Once open single press More in the bottom right hand corner.

2

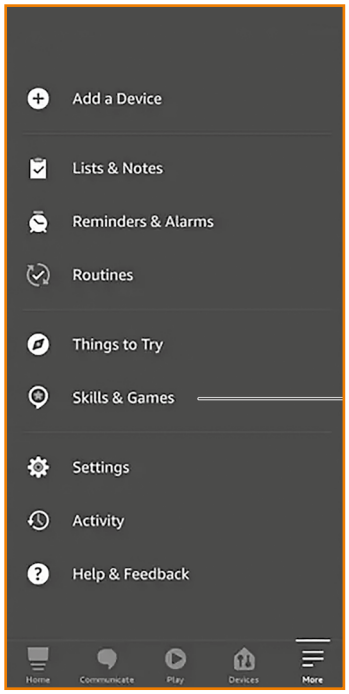

Single press Skills & Games on the pop up list.

3

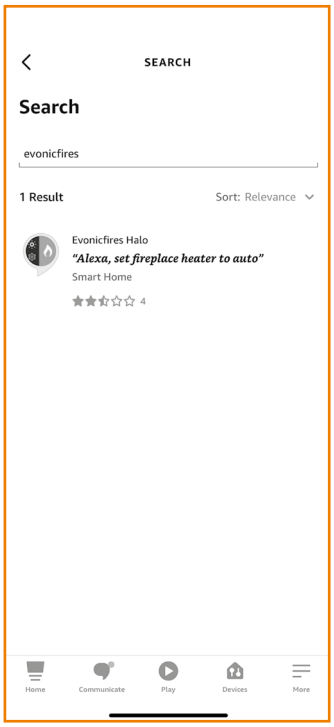

Single press Search and type in evonicfires. Select the Evonicfires Halo skill icon to open.

4

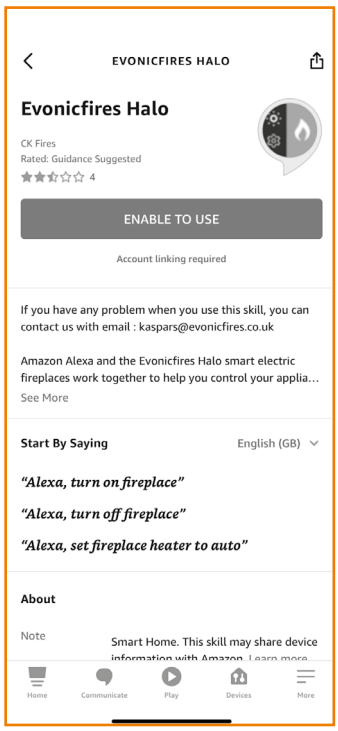

Now on the Evonicfires Halo skill page you can single press the Enable to Use button to go to the log in page.

5

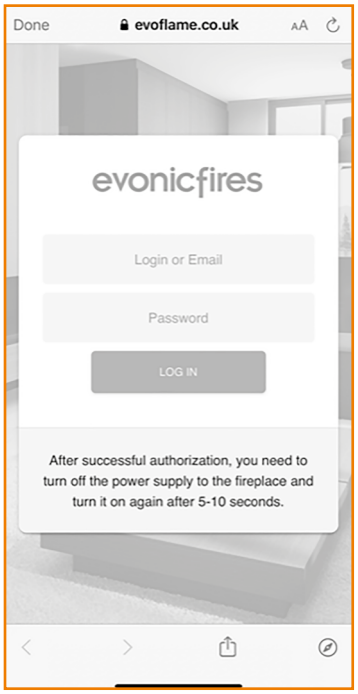

Enter the log in details that you previously entered in the app set up process, and single press Log In.

6

After a few moments your account will be linked, once this is done you can single press Close.

7

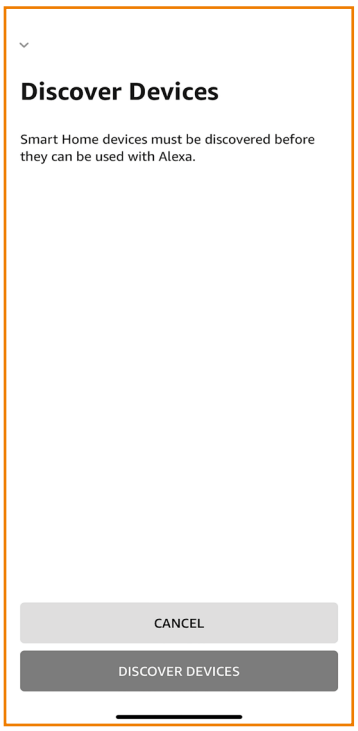

Single press Discover Devices to search for your fire.

8

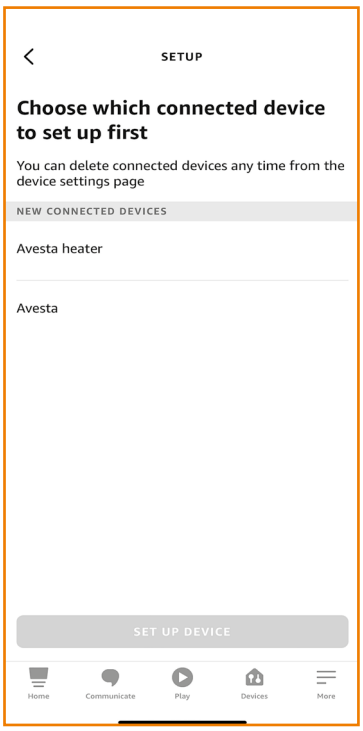

Your fire will show up as two devices, allowing you to programme the heater separately to the effects. Single press the second option, and Set up Device.

CONNECTING TO GOOGLE HOME

1

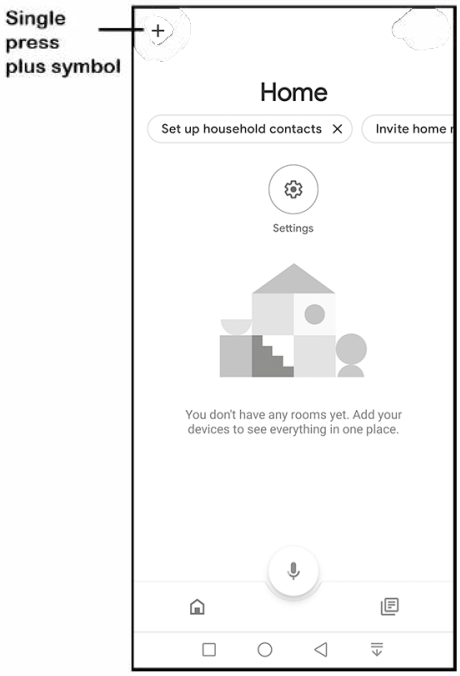

Once your fire is installed, and switched on, download and open the Google Home app. Once open single press the plus symbol in the top left hand corner.

2

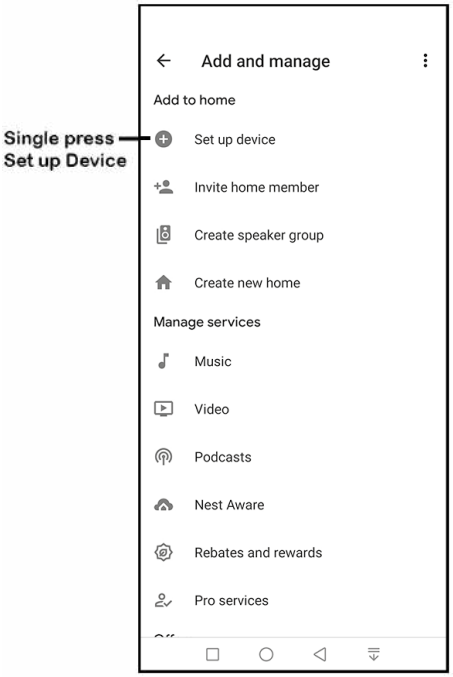

Single press Set up Device on the pop up list.

3

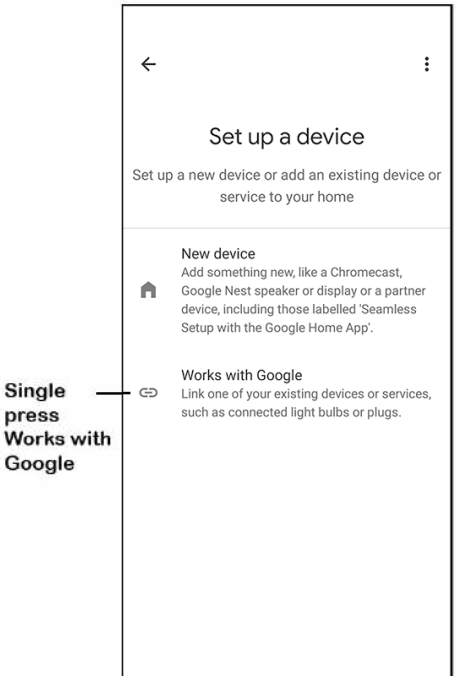

Single press Works with Google.

4

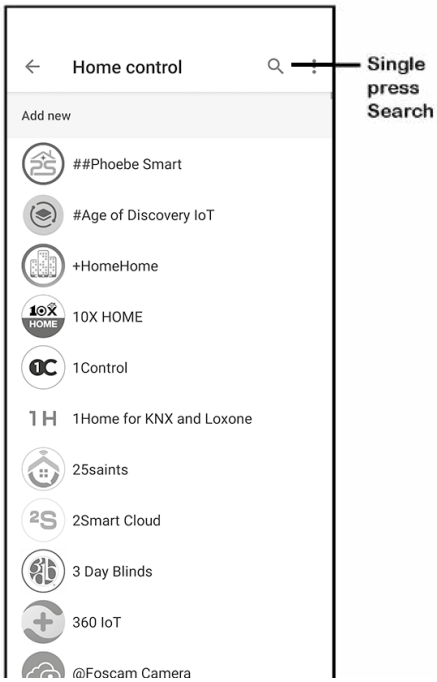

Single press the Search icon in the top right corner.

5

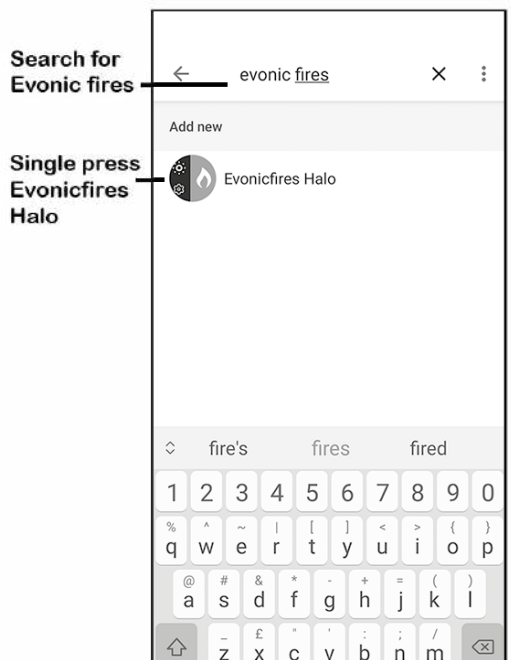

Type in Evonic Fires, single press search and then select the Evonic Fires E-Smart icon.

6

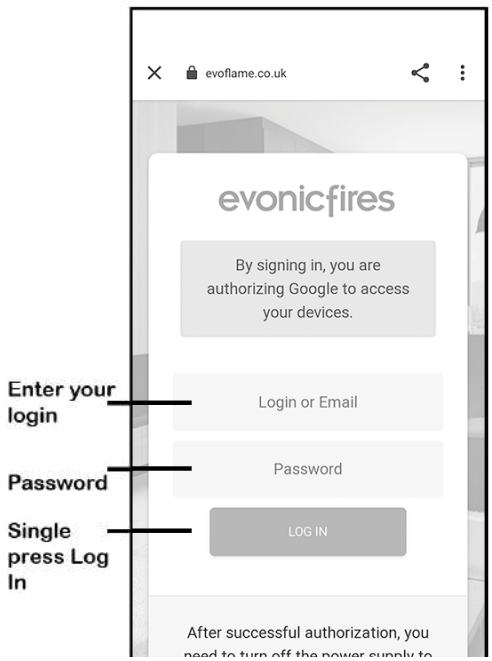

Once in the Evoflame log in page, enter the log in details that you previously entered in the app set up process, and single press Log In. Your appliance is now paired with Google Home!

COMMANDS FOR AMAZON ALEXA

When using Amazon Alexa or to control your appliance settings remember to substitute the words 'the fire' for whatever you have named your appliance.

TURNING THE APPLIANCE ON AND OFF

"Alexa, turn fire on." / "Alexa, turn the fire off."

TURNING THE HEATER ON AND OFF

"Alexa, set fire heater to auto." / "Alexa, set fire heater to off."

CHANGING THE TEMPERATURE
ALEXA CAN ONLY CHANGE THE TEMPERATURE BETWEEN 10° & 32°.

"Alexa, set temperature to 27 degrees."

"Alexa, make it warmer in there." - Increases the temperature by 3°

"Alexa, make it cooler in there." - Decreases the temperature by 3°

CHANGING THE FLAME EFFECT

"Alexa, set animation to....."

COMMANDS FOR GOOGLE HOME

When using Google Home to control your appliance settings remember to substitute the words 'the fire' for whatever you have named your appliance. Please note that the Google Home app cannot control the heater in the appliance.

TURNING THE APPLIANCE ON AND OFF

"Ok Google, turn on the fire." / "Ok Google, turn off the fire."

CHANGING THE FLAME EFFECT

"Ok Google, change the animation to ..... on the fire."

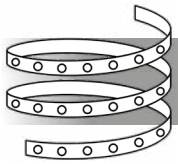

E-LLUMINATE LIGHTING KIT

For full instructions on how to install your LED lighting kit, please scan the QR code which will take you to our full manual. Alternatively, if you have installed and plugged in your lighting kit, you can begin setting them up with your e-smart cloud app.

E-SMART CLOUD APP LED CONNECTION

1

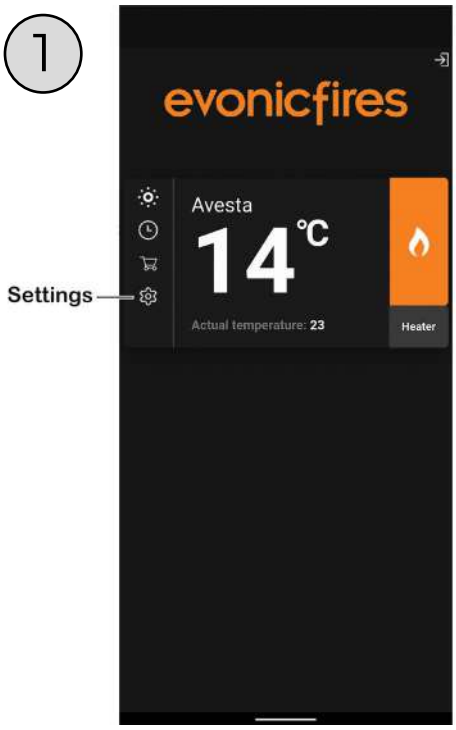

Once the LED strip is plugged into the mains and turned on. Go to the E-Smart app, then select Settings on your Home Page.

2

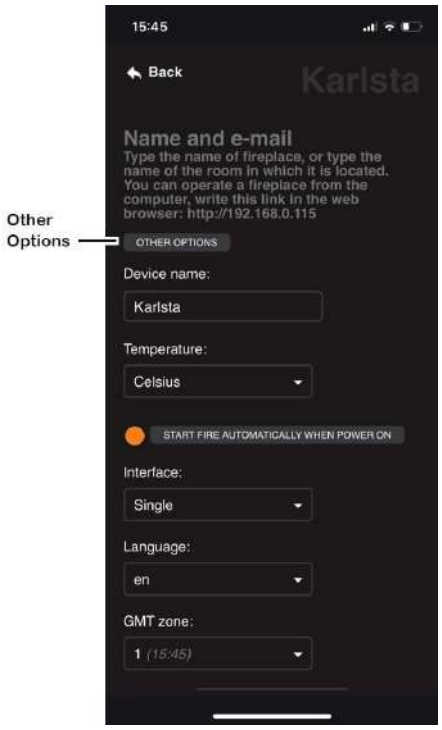

In Settings go to Other Options.

3

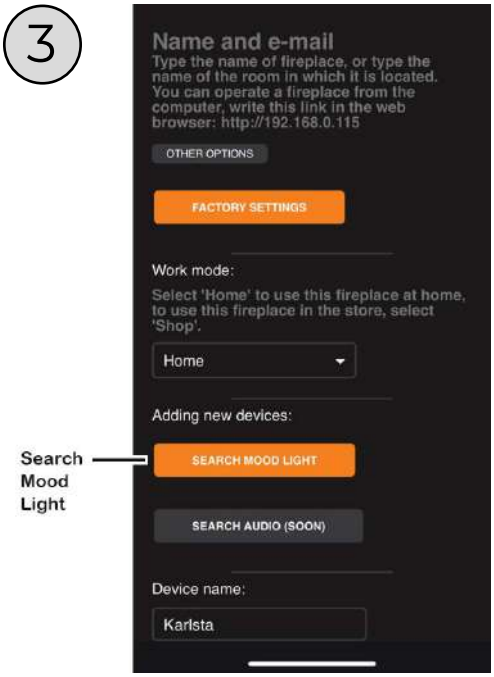

Click on Search Mood Light, and wait for the app to connect to the LED strip. This will take approximately 1 minute. Once the LED strip has been successfully connected, the strip will show solid green.

4

Once connected, the mood light option will show on your Home Page, as above.

WARRANTY

Evonic Fires 5-year warranty – 1 year parts & labour + 4 years parts supplied.

The above warranty terms and conditions, as of **1st May 2022**, are applicable for all relevant products purchased after this date. Appliances despatched prior to this date will have an alternative warranty as set out within the Installation and User Instructions that was supplied with the product, this was usually a standard 2-year warranty.

To receive your Extended Warranty your Evonic Fires product must have been purchased from an authorised stockist within our Retailer Network and your warranty registered with Evonic Fires through the online form - **evonicfires.co.uk/register-your-product**. The commencement date for the warranty period is the date of purchase. **Your product must be registered within 30 days of purchase to secure the additional warranty term.**

The product must be adequately serviced and maintained. Evonic Fires provide maintenance call outs at a cost, and information on this can be obtained by contacting our head office. Please see your Evonic Installation Instructions for further information on how to service and maintain your appliance.

During your extended warranty period, only parts supplied or authorised by Evonic Fires can be used to repair your fireplace, and these spare parts can be obtained by contacting our service department at **service@evonicfires.co.uk** or calling **01789 263868**.

Consumable items such as glass, screens, LED's, LED boards, filters and power supplies which are either subject to normal wear and tear or parts that require replacement in connection with normal maintenance are not covered within the extended warranty. These items are covered for the first 12 months.

To make a warranty claim, evidence must be supplied to our service department in the form of pictures, videos, or both. Failure to supply evidence to support your warranty claim may invalidate or delay the claim. Any visit by an Evonic Fires engineer will incur a service charge after the first year. We will not accept or reimburse the cost(s) of any third party who undertakes any work carried out on the product or fits parts, unless we have approved such work in advance of it being carried out.

WARRANTY EXCLUSIONS AND LIMITATIONS

The Evonic Extended Warranty does not cover:

1. Damage resulting from installation and usage where the appliance has not been installed or used in accordance with the CK Fires Ltd installation and operation instructions, or if the installation does not conform to local building, fire, and safety regulations.

2. Issues with mains/spur connections of power supply.

3. Damage resulting from the product not being adequately maintained. (Please see your CK Fires Ltd Installation and Operating Instructions for further information on how to service and maintain your appliance).

4. Damage caused by unauthorised modifications, use or repair.

5. Damage or defects caused by the product being stored in a damp, unheated environment.

6. Consequential loss (to the extent permitted by the law) relating to other associated products that have not been supplied by CK Fires Ltd.

7. Consequential loss (to the extent permitted by law) related to decorations, furnishings, or other household assets.

8. Removal and re-installation costs.

WARRANTY EXCLUSIONS AND LIMITATIONS

Repaired or replaced products are covered only for the remainder of the original warranty period. In the event of a claim being made, this must be reported to your retailer or CK Fires Ltd within 14 days of the fault occurring/being noticed. In the event of a product fault occurring during the warranty period years 2-5, CK Fires Ltd will send the appropriate component or goods necessary to rectify the fault, free of charge.

Nothing in the Extended Warranty shall make CK Fires Ltd liable for any or special, incidental, or consequential damages, injury to persons or property, or any other consequential loss beyond the consumer's statutory rights. The liability on these issues is covered by our Terms and Conditions of Sale.

CK Fires Ltd total liability extends only to the purchase price paid for the goods, except where such a limitation is prohibited by statute. CK Fires Ltd, in the event of a warranty claim, reserves the right either to replace the goods in question or to refund the purchase price of the goods. For product sold outside the UK and Ireland, UK law will prevail.

The Evonic Fires Extended Warranty does not affect your statutory rights.

REGISTER YOUR EVONIC FIRE

By registering your product on our website you ensure 4 years parts only cover on top of your standard one year warranty. Scan the QR code to take you directly to the registration page and secure your extra cover.

REPORT A FAULT

If you have any difficulties or problems with your appliance then please get in touch so that we can assist you. Please scan the QR code to be taken to our websites Report a Fault page, we will then be in touch with you shortly.

evonicfires

CK Fires Ltd / Evonic Fires

1, Evonic House, Clifford Park, Clifford Lane,
Stratford-on-Avon, CV37 8HW
Tel: +44 (0)1789 263868 Fax: +44 (0)1789 293080
Email: sales@evonicfires.co.uk
www.evonicfires.co.uk
Follow us on:
Instagram | Facebook | Twitter | LinkedIn
@evonicfires