evonicfires

STOVES
INSTALLATION MANUAL

e-lectra Banff	**e**-lectra **C600**	Camden **5**
Tuva	**e**-lectra **C800**	**C600 Black Edition**
Halmstad	**e**-lectra **C900**	**C800 Black Edition**
Halden	Camden **4**	**C900 Black Edition**

CONTENTS

Health and safety....4
Checks Before Installation – **All models**....5
Free-standing Installation....6
C-Series Installation....7
C-Series Heater removal....9
Glass Installation - Slotted....10
Glass Installation - Slide....11
Control Methods....12
e-smart Remote Control - **Standard Models**....13
Retro-fitting the Remote Control - **Standard Models**....14
e-smart Remote Control - **Black Edition Models**....15
App Setup....16
Using the App....18
Control Overview - **Standard Models**....19
Control Overview - **Black Edition Models**....20
Programming the Timer....21
Problems Connecting....22
Connecting to Amazon Alexa....24
Connecting to Google Assistant....26
Voice Control Commands....28
Resetting Your Fire....29
Warranty....30

The following materials and components should be disposed of in accordance with the below table.

Metal - Steel or cast iron	Can be taken to a local recycling centre for reuse to reduce waste going to landfill.
Glass & Screens	Can be taken to a local recycling centre for reuse to reduce waste going to landfill.
Vermiculite	Non hazardous material. Vermiculite can be crushed up and used for plant bedding and ash used for composting or disposed of at a local recycling centre for reuse to reduce waste going to landfill.
Electrical components - Fans, heater elements, PCB's, Power pack's, LED's	Dispose at a local recycling centre In accordance with latest WEEE directive.
Log fuel effects	These logs contain refractory ceramic fibre materials which requires disposal in accordance with WEEE legislation.
Natural Wood	Can be taken to a local recycling centre for reuse to reduce waste going to landfill.

EU DIRECTIVES

All Evonic Fires products meet the requirements of the EC Directives.
These directives have been met by compliance with the following standards:

EU 2011-65/EU 2015/863 Restriction of Hazardous Substances.

References to the relevant designated standards used:

EN 55014-1:2006 + A1:2009 + A2:2011 Electromagnetic Compatibility.

EN 55014-2:2015 Electromagnetic Compatibility.

EN 61000-3-2:2014 Electromagnetic Compatibility (EMC). Limits. Limits for Harmonic Current Emissions.

EN 61000-3-3:2013 Electromagnetic Compatibility (EMC). Limits. Limitation of Voltage Changes, Voltage Fluctuations and Flicker.

EN 60335-1:2012 + A11:2014 Household and similar electrical appliances - Safety

EN 60335-2-30:2009+A11:2012 Household and similar electrical appliances. Safety. Particular requirements for room heaters

UKCA STANDARDS

All Evonic Fires products are in conformity with the relevant UK Statutory Instruments (and their amendments).

2016 No. 1101 The Electrical Equipment (Safety) Regulations 2016

2016 No. 1091 The Electromagnetic Compatibility Regulations 2016

2012 No. 3032 The Restriction Of Use Of Certain Hazardous Substances In Electrical And Electronic Equipment Regulations 2012

IMPORTANT INFORMATION AND HEALTH & SAFETY

When using electrical appliances, basic precautions should always be followed to reduce the risk of fire, electric shock, and injury to persons, including the following:

- Read all of the instructions carefully before using the appliance, only use this appliance as described in this manual. Any other use not recommended by the manufacturer may cause injury to persons, or damage to the appliance.
- Remove all packaging and dispose of it at an appropriate recycling facility.
- When transporting or storing the appliance and power lead, keep in a dry place, away from excessive vibration and store so as to avoid damage.
- This fireplace is hot when in use. To avoid burns, do not let bare skin touch hot surfaces. The trim around the heater outlet becomes hot during heater operation. DANGER: High temperatures may be generated under certain abnormal conditions.
- Do not install this appliance immediately in front of a fixed socket outlet.
- Do not install this appliance in the immediate surroundings of a bath, shower, swimming pool or any other area where the appliance could come into contact with water or humidity, e.g. a bathroom.
- Do not use in areas where gasoline, paint, or any flammable liquids are used or stored.
- This appliance is only suitable for indoor use, do not use outdoors.
- Do not cover the appliance, or let the air inlet/outlet to be obstructed in any way as it may overheat.
- Keep the power lead away from hot surfaces and the heater outlet. Do not route the power lead in front of the appliance, or under any carpets or rugs. Do not allow the power lead to be coiled up once installed, as this can cause overheating.
- This appliance must be firmly fixed to or recessed into, a flat internal wall.
- A maintenance hatch must be installed into the surrounding installation to allow future access.
- Always use a certified electrician should new circuits or outlets be required. And always use properly grounded, fused and polarised outlets.
- Where the power lead passes through any masonry wall, stone surround etc. ensure that suitable rubber bushes are fitted at any possible wear points.
- If the power lead is damaged do not use the appliance until it has been replaced.
- Do not use any external switching device, timers, or extension leads. Do not connect the appliance to a circuit that is frequently switched on and off by the utility.
- In the event of a malfunction, switch off the appliance, and disconnect it from the mains power supply. Have the appliance inspected by a certified electrician before reusing.
- Do not use the appliance if it is damaged. In the event of any damage to the appliance, please contact the retailer from whom the appliance was purchased.
- Any repairs must only be performed by a certified electrician.
- Extreme caution is necessary when any heater is used by, located near children or people of reduced mobility, and whenever the unit is left operating and unattended.
- Young children should be supervised to ensure that they do not play with the appliance.
- Disconnect from the power supply before performing any cleaning, maintenance or relocation of the unit. Do not use steam cleaners, or aerosols near the appliance.
- Do not burn wood or anything else in this appliance.
- Do not strike the glass. The glass used is toughened safety glass, if broken it will shatter into small chunks which are less likely to cause injury.
- Do not drill or screw any new holes into the appliance.

CHECKS BEFORE INSTALLATION - ALL MODELS

INSTALLATION DO'S AND DONT'S

Before installing the appliance please read and take into account the following important requirements;

- Consult a qualified professional to check the structure of the installation site.
- If installing into an existing chimney, make sure to adequately block off the flue.
- The appliance must never be installed in front of an electrical socket.
- The appliance must not be installed anywhere that it may come into contact with water, i.e. a bathroom.
- Do not wet plaster directly onto the appliance.

CHECKS BEFORE INSTALLATION

We recommend turning on the appliance before installation, connect the appliance to a power source using the provided electrical lead, and depress the right side of the **ON/OFF** switch.

Remove the electrical lead from the wall and continue with the installation.

Please note: The image below shows the C600 appliance. Not all stoves have the same ON/OFF switch and Power Inlet location. ON/OFF switch locations and Power Inlet locations for all models can be found on page 6.

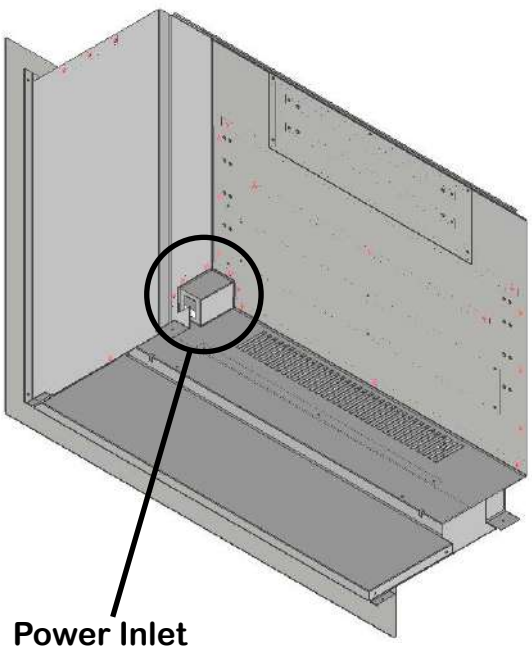

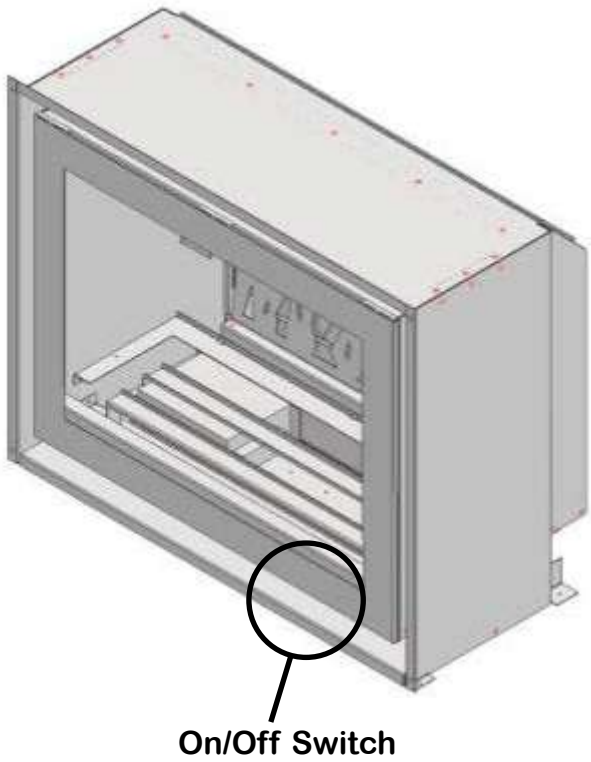

STOVE INSTALLATION - BANFF / HALDEN / TUVA / HALMSTAD

FREE-STANDING

The following models are free-standing appliances, which means that they can be situated almost anywhere without any installation. Once the outer packaging has been removed and the product has been tested (see page 5), the below models can then be placed in situ. Be sure to locate them as close to a plug socket as possible to avoid the power lead running along the floor and becoming a trip hazard.

HALDEN

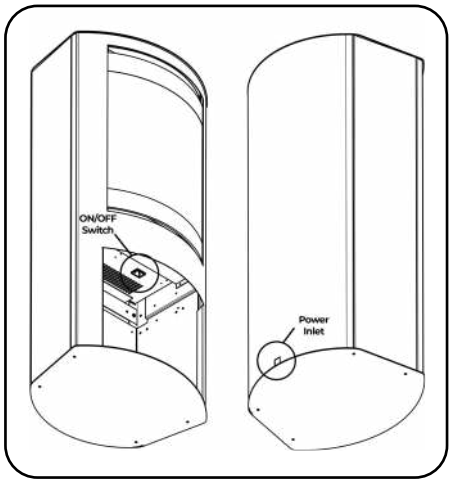

TUVA

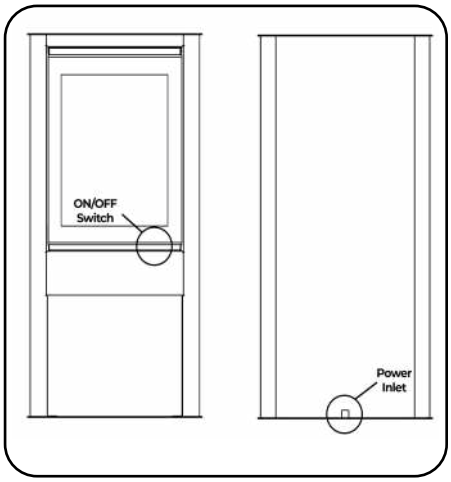

E-LECTRA BANFF
CAMDEN 4
CAMDEN 5

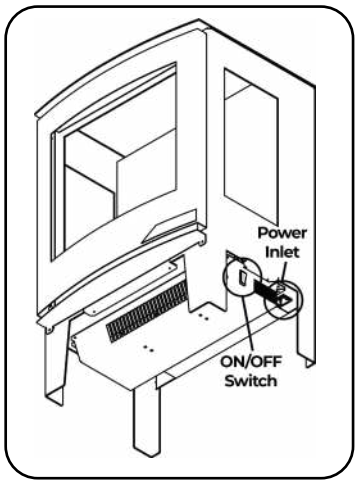

HALMSTAD

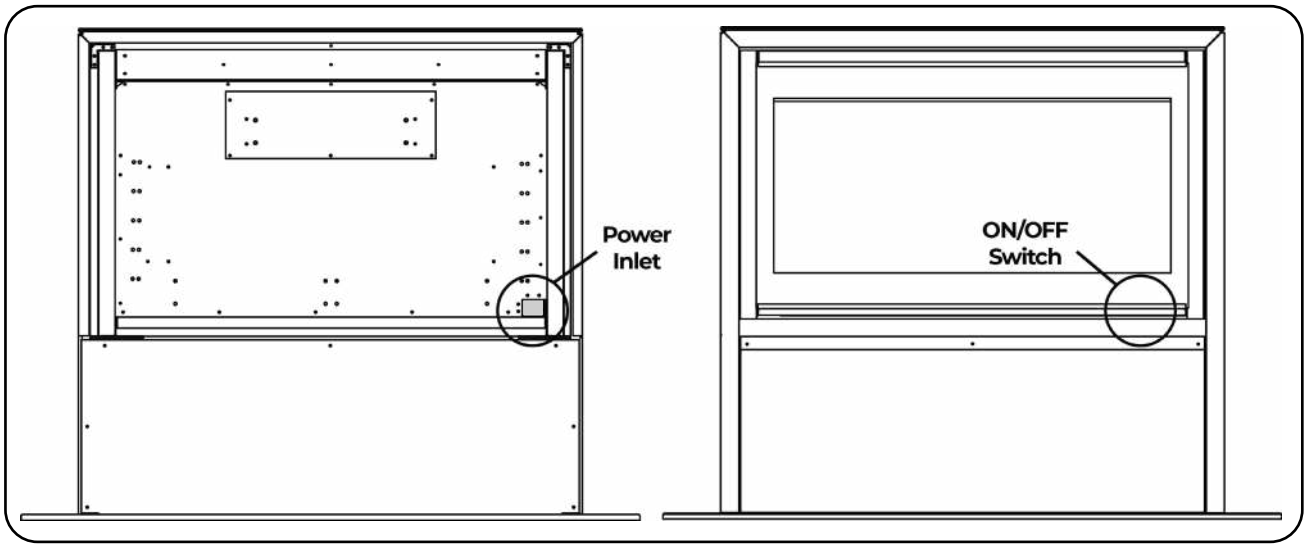

STOVE INSTALLATION - C600/C800/C900

1

Once your studwork frame has been constructed, slide the appliance into the prepared void.

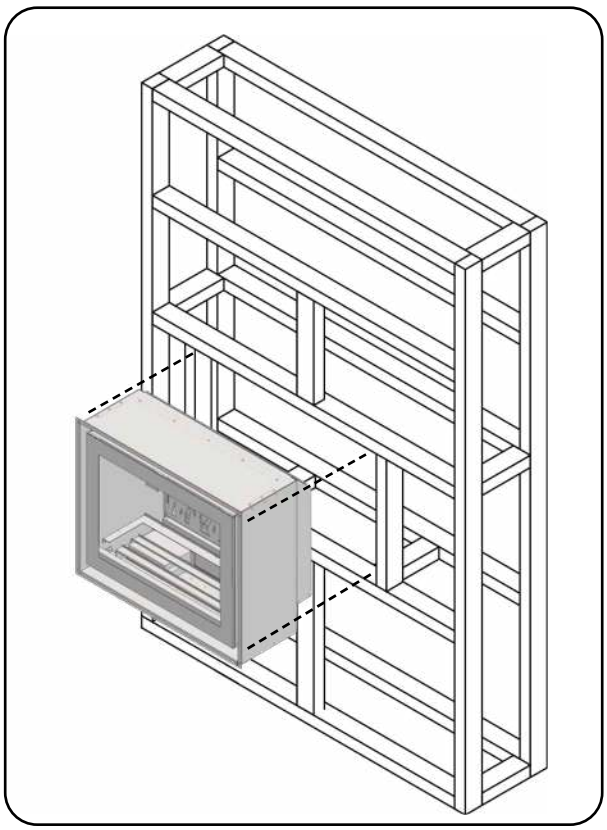

2

Once you have slid the appliance into place, you can then go about securing it in position by screwing it into the studwork frame. There are 4 holes located in each corner .

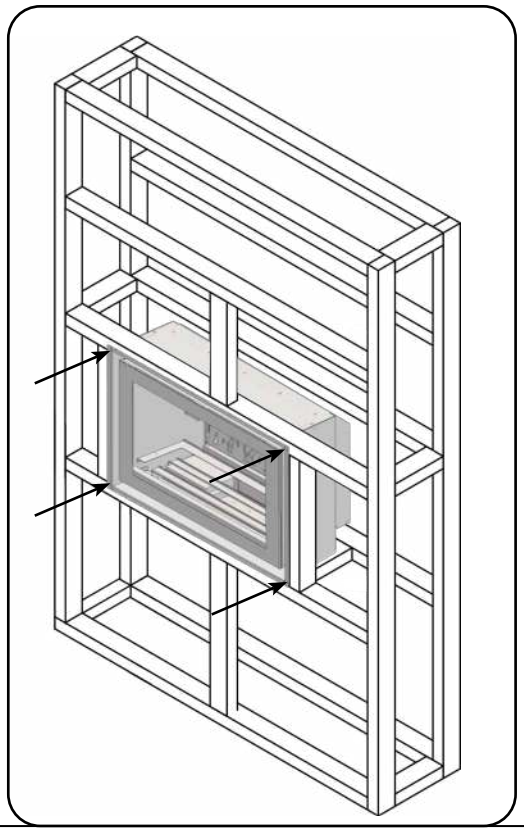

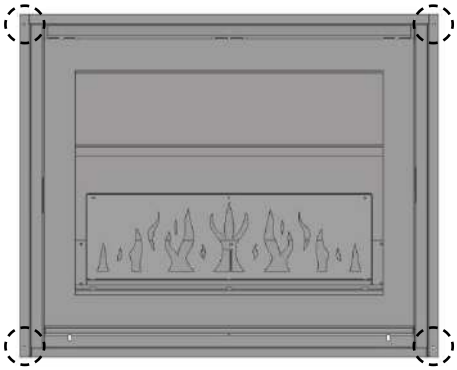

3

Once you have secured the fire into place, adding the outer frame is the final stage. The outer frame of C-series models come with either a 3-sided or 4-sided frame, which are both attached using the same method. The frame uses a a combination of magnets and a push fit method. The frame will slide perfectly into the front of the stove.

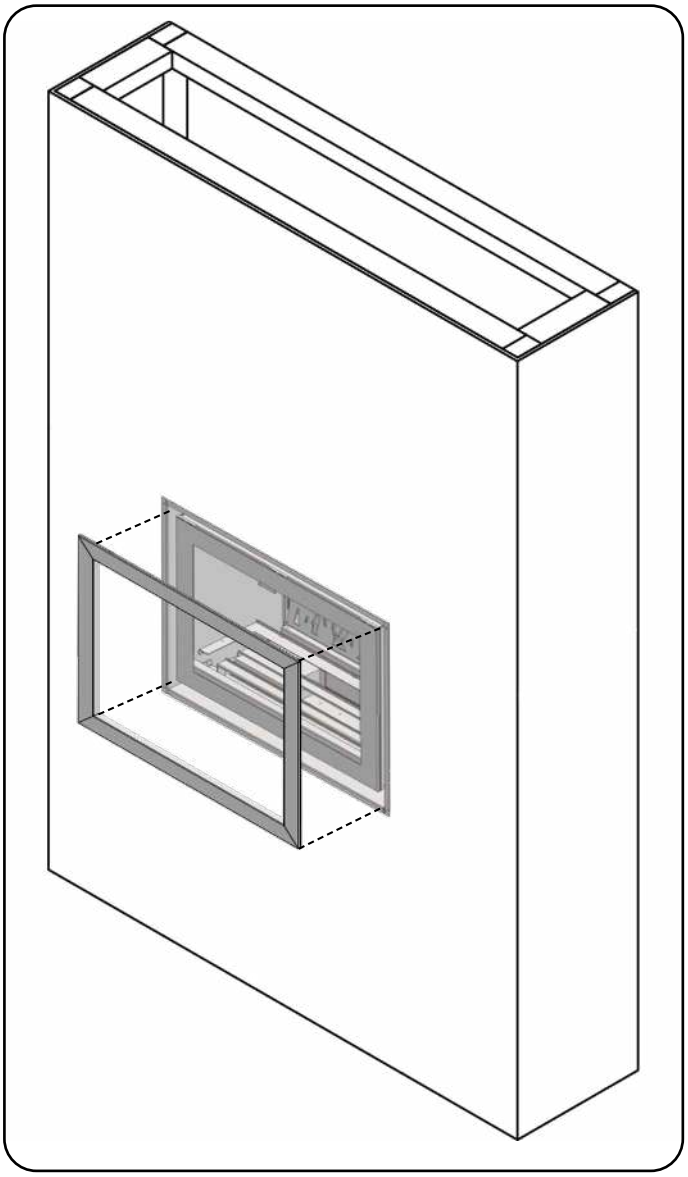

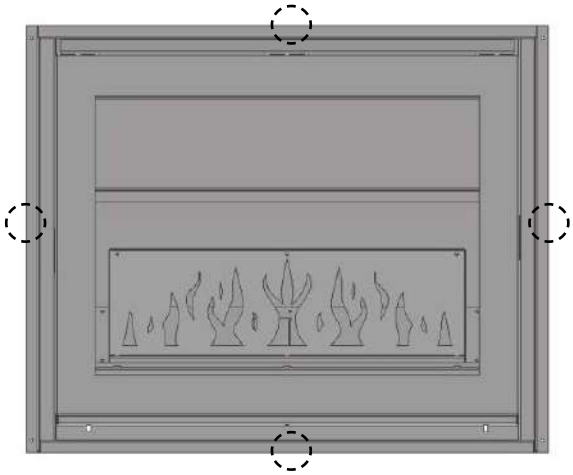

Above you will see suggested positioning for the magnets, although they can be positioned anywhere along the plaster kit to provide extra support.

C600/C800/C900 HEATER REMOVAL

1

The heater for the C600, C800 & C900 can be accessed from the front of the appliance. Following the glass removal steps, remove the front glass and the rear glass to expose the heater housing. The heater housing is attached using 4 screws - 1 in each corner of the housing.

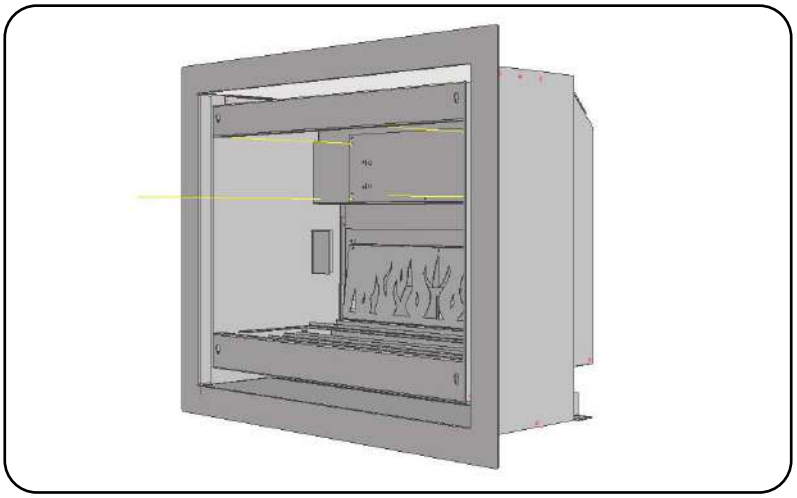

2

Unscrew the heater housing and carefully pull the housing out towards you. To fully remove the housing you will need to remove the wiring connecting the heater. You must ensure the fire has been turned off at the mains before attempting this.

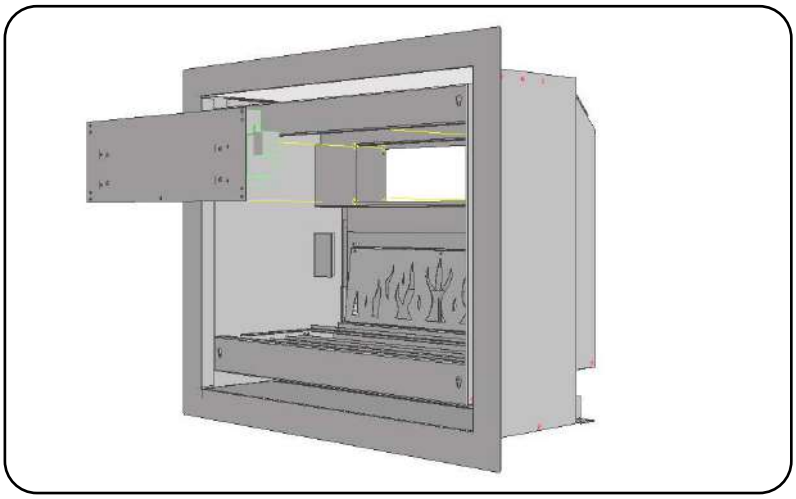

GLASS INSTALLATION

SLOTTED INSTALL

The slotted install of the front glass applies to the e-lectra Banff, C-series range, Halmstad, Tuva and Camden models. The model shown in this example is the Halmstad, but the same process applies to all listed models.

1

To install the front glass first locate the four keyhole slots on the front of the appliance, and the four screws on the back of the front glass.

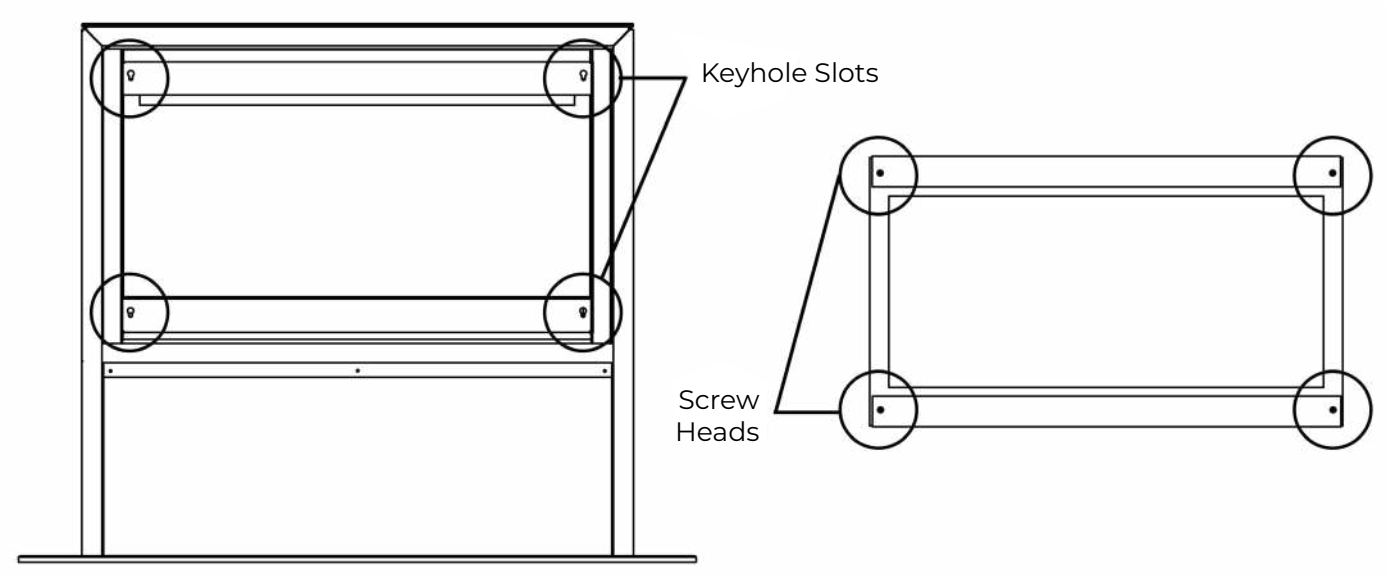

2

Now line up the screws and screw holes and slot them into each other, then allow the glass to drop into place.

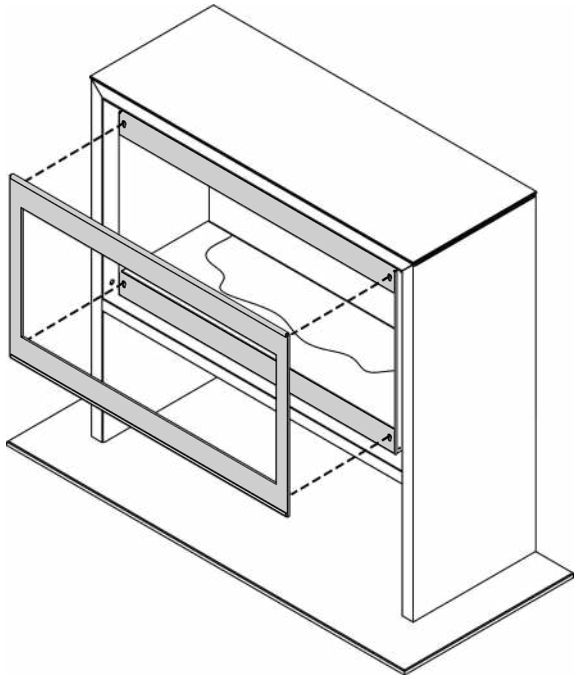

Warning:
Always support the glass throughout the entire process until the glass is fully fitted. The glass is toughened safety glass and if broken will shatter into many small chunks.

GLASS INSTALLATION

SLIDE INSTALL

The sliding install of the front glass applies only to the Halden model.

1

To remove the glass from the Halden model, first slide the lid back slightly, then lift.

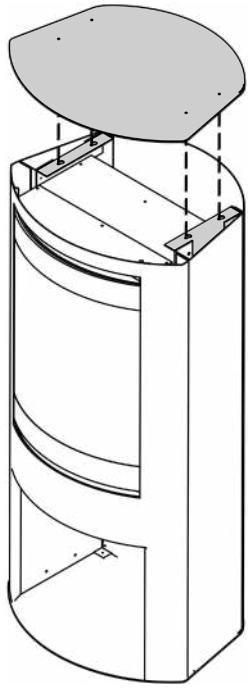

Warning:
Always support the glass throughout the entire process until the glass is fully fitted. The glass is toughened safety glass and if broken will shatter into many small chunks.

2

Now you can slide the glass vertically out of the appliance.

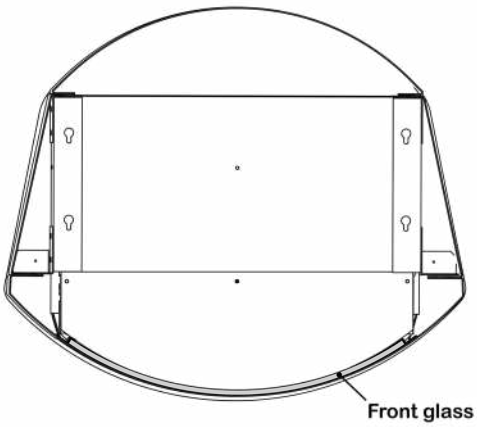

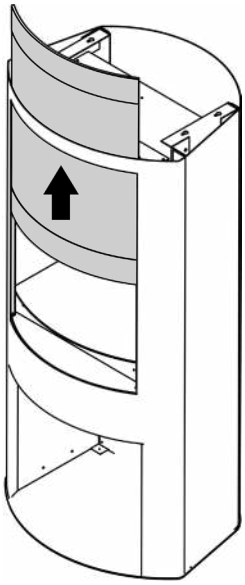

CONTROL METHODS

There are two ways to control all the features of your Evonic appliance - **remote or e-smart App.**
Please note: There are different remotes for standard models and black edition models.

Our remote handset comes automatically paired and ready to operate straight out of the box. If you choose to control your appliance via the e-smart app, your internet router and smart device should meet the following minimum requirements -

Wi-Fi Router

- Compatible with IEEE 802.11n/g/b
- WPA2 encryption
- Radio frequency: 2.4GHz band
- Wireless auto channel: auto search for wireless LAN radio channel free of interference
- Support for the User Datagram Protocol (UDP)
- The minimum distance from your internet router to the fire should be 70cm

Smart Device

- Minimum device requirements IOS 8.0 or Android 10

E-SMART REMOTE CONTROL - STANDARD MODELS

Applicable models - Tuva / Halmstad / Halden / **C600** / **C800** / **C900** / e-lectra Banff

Top Left - Turn your fire **ON** and **OFF**

Top Right - Turn your feature lights and overbed illumination **ON** and **OFF**

Middle Left - Turn your heater **ON**

Middle Right - Turn your heater **OFF**

Bottom Left - Change the flame animation. **Not applicable with single colour models.**

Bottom Left - Adjust the brightness.

With the remote control the heater is pre-set to **28°**, if you would like to adjust the temperature you need to do this through the app.

The brightness button adjusts the brightness of the fire by **0%**, **25%**, **50%**, and **100%**.

SETTING TIMERS USING YOUR REMOTE

You can set up timers for your appliance easily by using your remote control.

Once you have turned your fire on using the remote, simply press the **Heater ON** icon to set a 15 minute timer. Each click of the **Heater ON** button adds another 15 minutes to the timer and this can be used for a total of 90 minutes (6 clicks).

RETRO-FITTING THE REMOTE CONTROL

In order to retro-fit your remote on older models, please ensure you follow these steps **BEFORE** you attempt to use the remote control system.

1

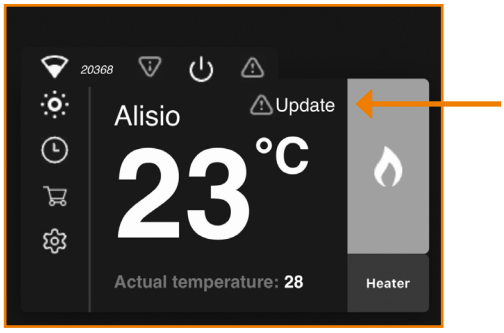

To begin the retro-fit of the remote control, press the 'update' icon on the e-smart cloud app home screen.

2

Once the fire has updated, select the settings icon on the home screen.

3

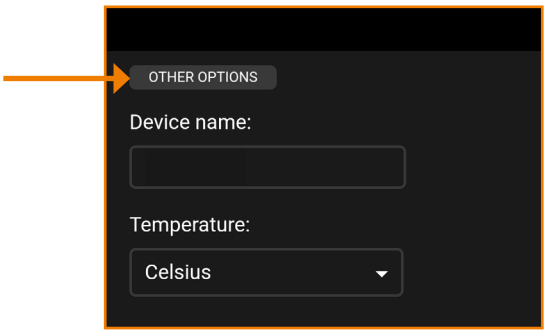

Once the settings panel is open, click 'other options'.

4

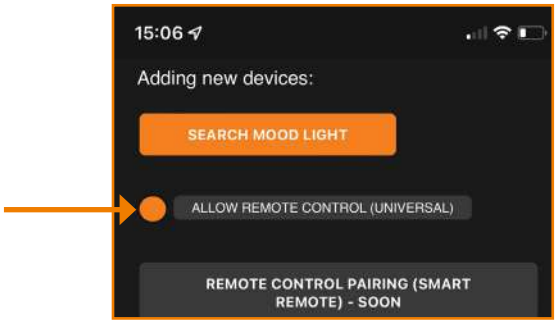

Scroll down to the section that states 'allow remote control (universal)'. Ensure this is highlighted and press save.

5

Press save. You will then hear an audible beep to notify you of the pairing.

6

Turn your fire OFF, then back ON. You remote will now be paired and ready to use.

E-SMART REMOTE CONTROL - **BLACK EDITION**

Applicable models - C600 **Black Edition** / C800 **Black Edition** / C900 **Black Edition** / Camden 4/5

1. Remote Control/Handset Pairing Process: After turning on the fireplace with the rocker switch, there is a 60-second pairing window. This window begins after a beep, which occurs 15-20 seconds after the fireplace is switched on. After the first beep, press the '**Heater ON**' button for 5 seconds until you hear a second beep. The pairing is now complete.

2. Factory Reset: To reset, press and hold the 'Change Log Colour' button until you hear a beep, then press and hold the 'Change Fuel Bed Effect' button until it beeps again. The reset process is complete.

3. Speed Control: To adjust the speed, push the speed joystick up/down until desired speed has been reached.

4. Log Colour Brightness Logic:
- (-) Button: There are 5 brightness levels: 100%, 75%, 50%, 25%, and 0%. Press the (-) button to decrease brightness by 25% each time, down to 0%.
- (+) Button: There are 5 brightness levels: 100%, 75%, 50%, 25%, and 0%. Press the (+) button to increase brightness by 25% each time, up to 100%.

5. Fuel Bed Brightness Logic:
- (-) Button: There are 5 brightness levels: 100%, 75%, 50%, 25%, and 0%. Press the (-) button to decrease brightness by 25% each time, down to 0%.
- (+) Button: There are 5 brightness levels: 100%, 75%, 50%, 25%, and 0%. Press the (+) button to increase brightness by 25% each time, up to 100%.

6. Flame Effect Logic:
- Pressing the button advances to the next animation your model offers. This is not applicable on single colour models.

E-SMART APP SETUP

Applicable models -

C600 / C800 / C900

C600 **Black Edition** / C800 **Black Edition** / C900 **Black Edition**

Camden **4** / Camden **5**

Tuva / Halmstad / Halden / e-lectra Banff

1

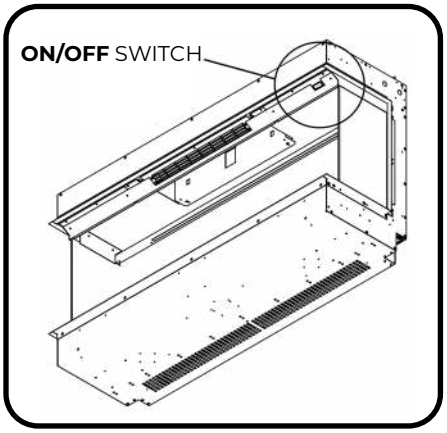

Make sure that your fire is plugged in and the switch is on. Then turn on your fire by pressing the ON/OFF switch to the 'ON' position.

2

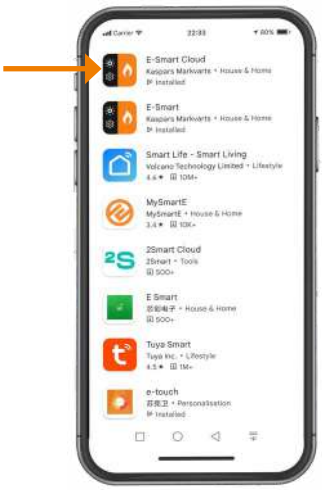

Download the **E-Smart Cloud** app from the Apple Store, or Google Play Store.

3

Open the Settings panel on your device and connect to the fire's wireless connection. The name of the fire's wi-fi will vary depending on the model.

4

Open the E-Smart app on your device

5

Open the settings panel on the app's Home Screen.

6

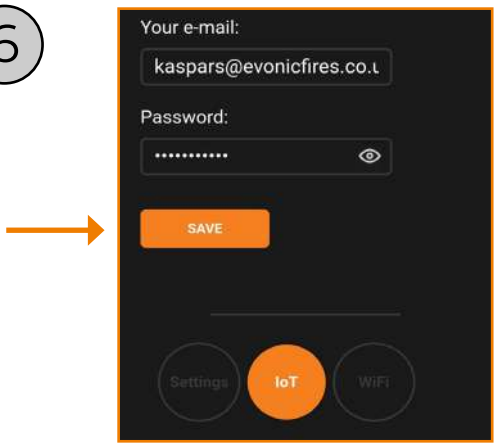

Scroll down to the 'IoT Registration' section and fill in your email address and create a password. Press 'Save'. Then select the grey wi-fi button.

7

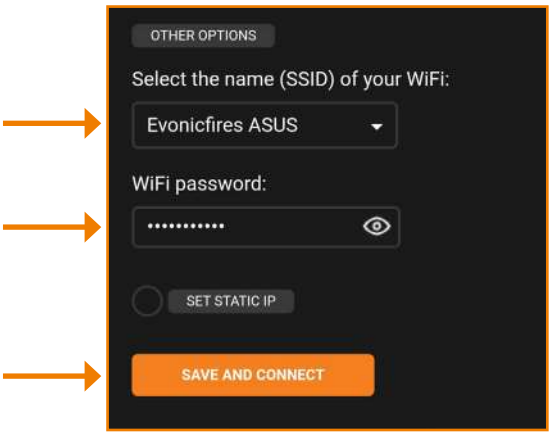

Select your router from the drop down box, and enter your router's password. Press the eye icon to double check for mistakes. Press 'Save and Connect'. Only select Static IP if advised by an IT professional.

8

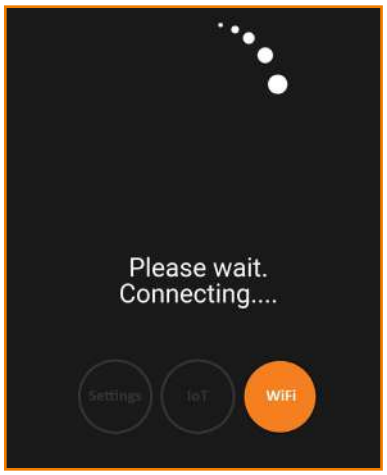

The pairing process between your device, the fire, and your router will now take place. This may take a few minutes, and when the app shows 'Redirect' you may see the lighting on your fire change colour. This is completely normal. To complete the setup, turn your fire off then back on.

USING THE E-SMART APP - ALL MODELS

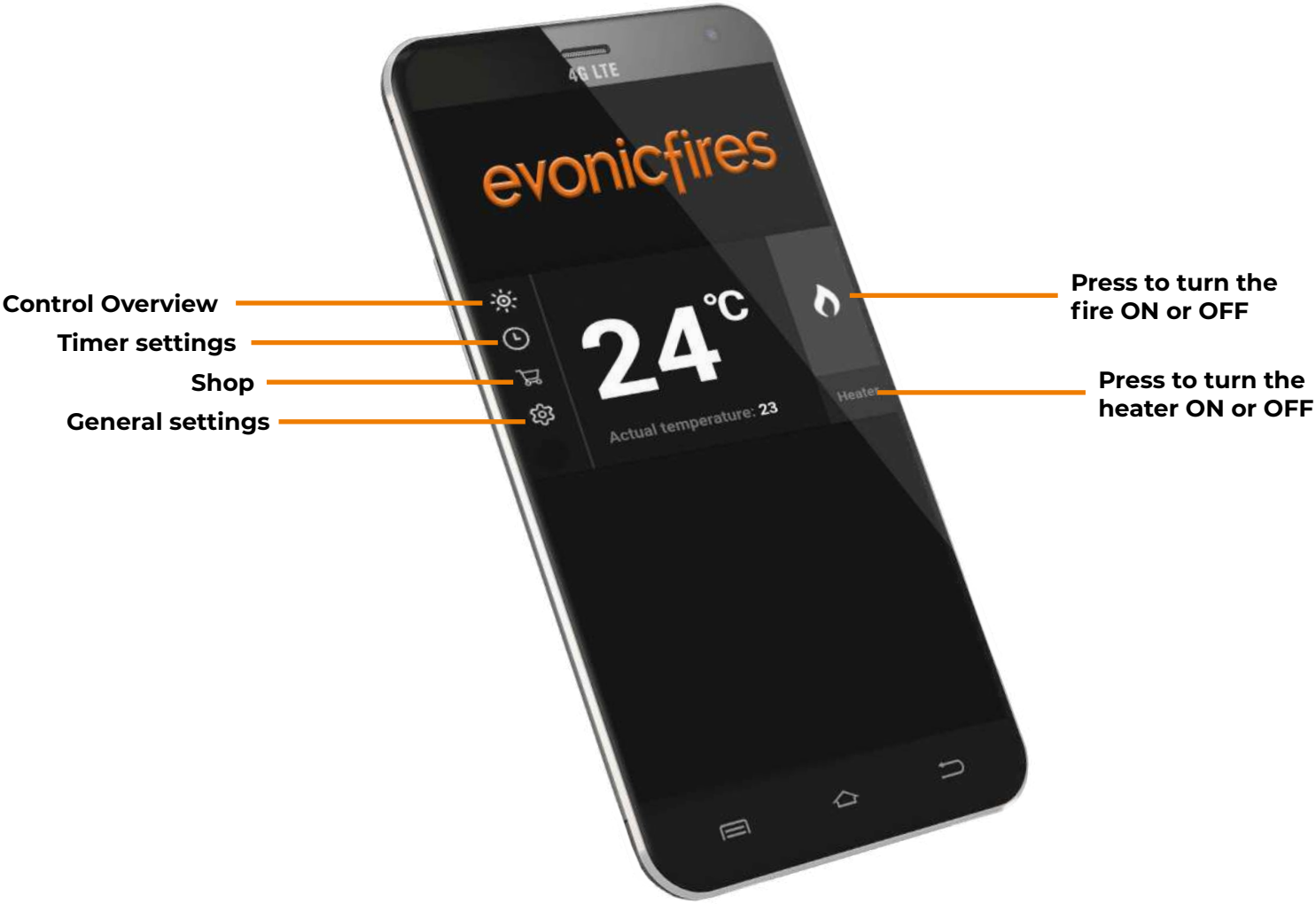

E-SMART APP SETUP

On the Home Page of the E-Smart Cloud App you can see the name of your fire, the chosen temperature, and the actual temperature. On the left hand side you can select the timer, shop, and app settings. On the right hand side you can turn the lights in the fire on and off, and also turn the heater on and off.

To enter the Control Overview either select the light bulb icon on the top left or the central temperature box.

CONTROL OVERVIEW - STANDARD MODELS

Applicable models -

Tuva / Halmstad / Halden

C600 / **C800** / **C900** / e-lectra Banff

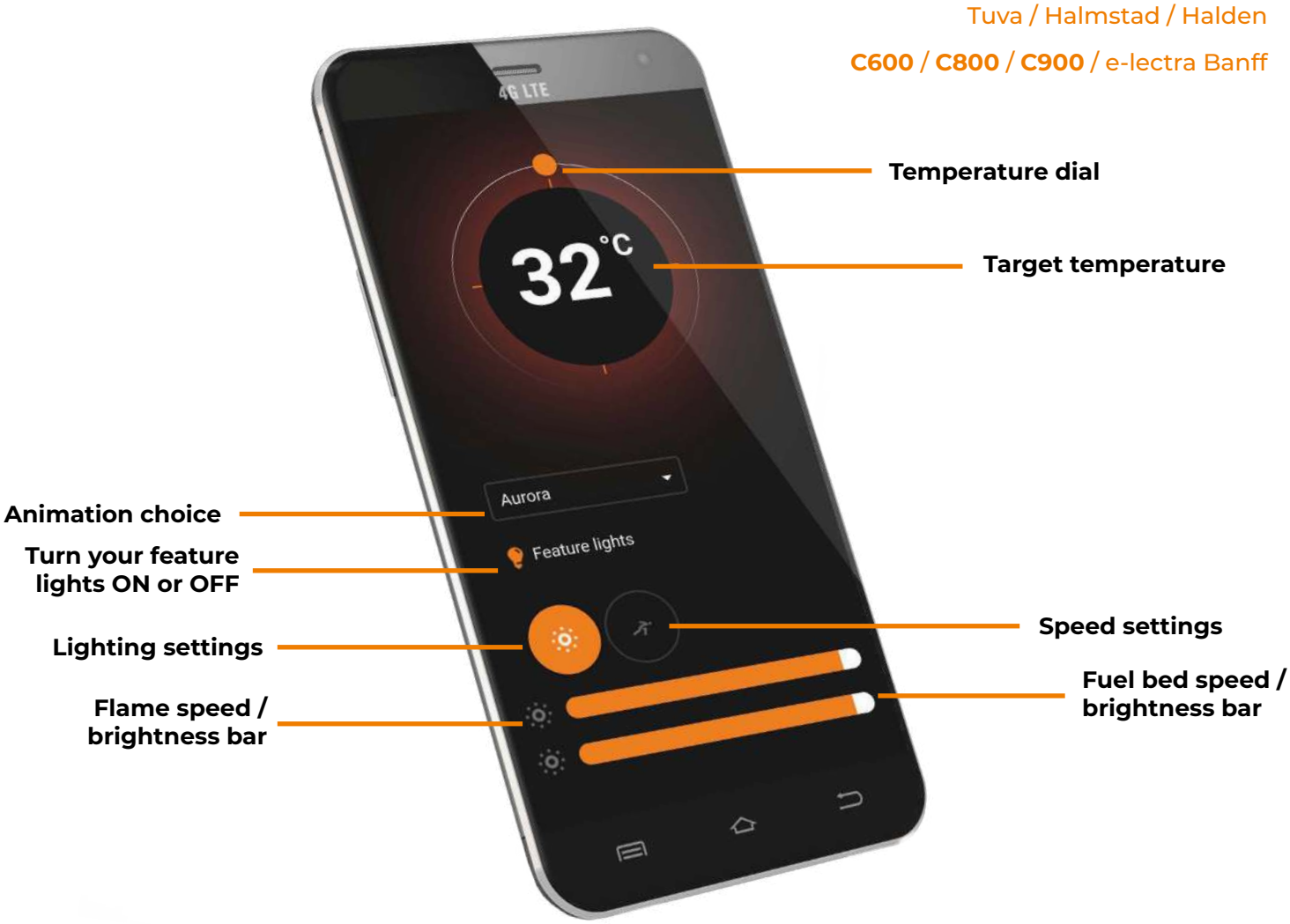

To adjust the desired temperature of your fire ensure that the heater is selected on the Home Page in the previous step. Then press, hold, and rotate the temperature dial to set the temperature.

The animation drop down allows you to choose the flame effect for your fire, more flame effects are available to download from our shop on the Home Page.

The 'Feature lights' button will activate the over fuel-bed lights, if you have a model with tile wings then this button will also turn on the side down-lighters.

By clicking on lighting settings you can adjust the flame brightness by pressing, holding, and sliding the tab at the bottom of the screen. Slide left to lower the brightness, and right to increase the brightness. You can adjust the fuel bed brightness in the same way with the lower tab slider.

To change the speed of the LED flame effect single press the speed setting option, and slide the top dial left to slow it down, and right to increase the speed. Likewise with the fuel bed speed, slide the lower tab left to slow it down and right to increase it.

CONTROL OVERVIEW - **BLACK EDITION**

Applicable models -

C600 **Black Edition** / C800 **Black Edition** / C900 **Black Edition**

Camden 4/5

SCREEN NAVIGATION

To adjust the desired temperature of your fire ensure that the heater is selected on the Home Page in the previous step. Simply press the increase/decrease arrow until desired temperature has been reached.

The animation drop down allows you to choose the flame effect for your fire. **This is not available on single-colour models**.

You can select your desired brightness on the flame, log and fuel bed animations by pressing the lighting settings button, and using the swipe bars to increase/decrease brightness.

You can select your desired speed of the flame, log and fuel bed animations by pressing the speed settings button, and using the swipe bars to increase/decrease LED speed.

PROGRAMMING THE TIMER

1

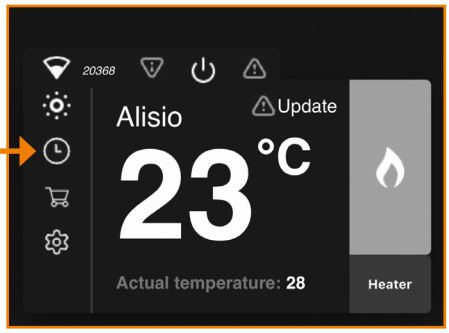

Single press the clock icon on the Home Page to begin programming the Timer.

2

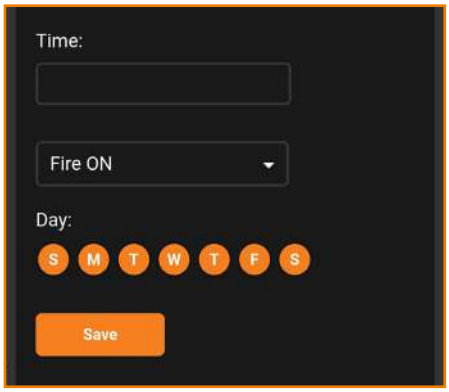

Input your desired time in the Time box, select the action (Fire On/Off/, Heater On/Off) you want. Deselect the day/s you don't want it to apply to, and press the Save button.

3

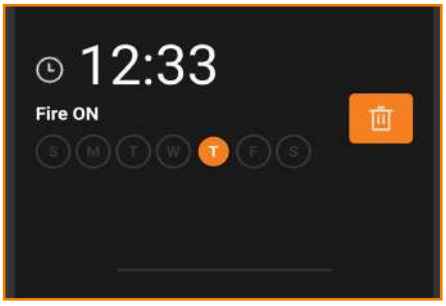

The above screen will now show your set timer. To delete the timer press the bin icon. To add an additional timer scroll down and repeat the process. Press the Back button to return to the Home Page.

UPDATING YOUR FIRE AND LOGGING OUT

Update your fire by clicking on the triangular icon. Do not turn your fire off until it is complete It may take up to 10 minutes to update.

To log out of the e-smart cloud app, on your home screen you need to press the 'log out' icon.

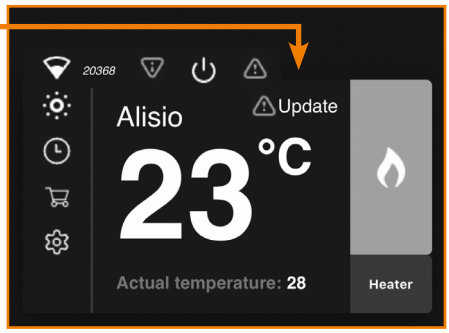

PROBLEMS CONNECTING

If you are having problems connecting your fire with your device and router please try the following steps to fix the issue.

- Switch fire **OFF**
- Switch wi-fi router **OFF**
- Switch fire back ON (Keeping router **OFF**)
- Open the wi-fi settings on your device - find and select your product / fire
- Open the e-smart App on your device and select the settings icon
- In '**Device Name**', rename your fire (Be sure not to use numbers or spaces when renaming your fire)
- In the Settings menu scroll down to the IoT Registration and check that your email and password are correct. You can click the **eye icon** to help you see any mistakes. Press save.
- Check you have selected the correct network and the wi-fi password entered is correct, you can click the **eye icon** to help you see any mistakes.
- Make sure **'Static IP'** is NOT selected (unless advised by an IT professional). Press save and connect.
- Wait 2 minutes for the fire to try and re-connect. Once this process is finished the App will show the home screen (Page 20).
- Switch your fire **OFF**.
- Switch your wi-fi router back **ON**.
- Switch your fire back **ON**.

If your wi-fi signal is weak, the App will show you a red warning message located on the home screen.

If your problems persist after attempting to re-connect, please contact our service department.

RESETTING YOUR FIRE

If you have entered a wrong email or password during the set-up process, then you may need to reset your fire to factory settings. To do this your fire must be updated to the latest version, you can do this by following the instructions on page 22.

Once your fire is fully updated you can reset it by turning it off and on at the power switch 5 times. Be sure to allow 1 second between each click. There will be an audible beep after this has been done, you can then continue with the set up process on page 16.

CONNECTING TO AMAZON ALEXA

1

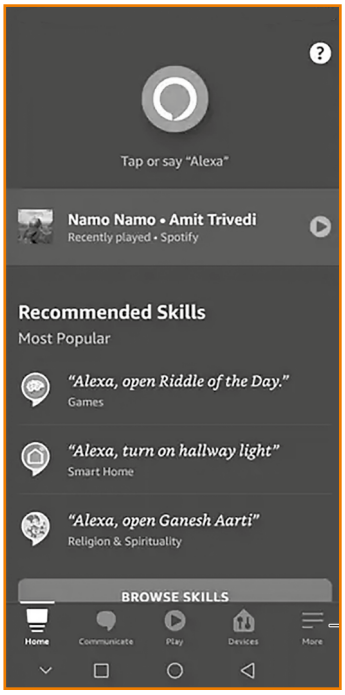

Once your fire is installed, and switched on, download and open the Amazon Alexa app. Once open single press More in the bottom right hand corner.

2

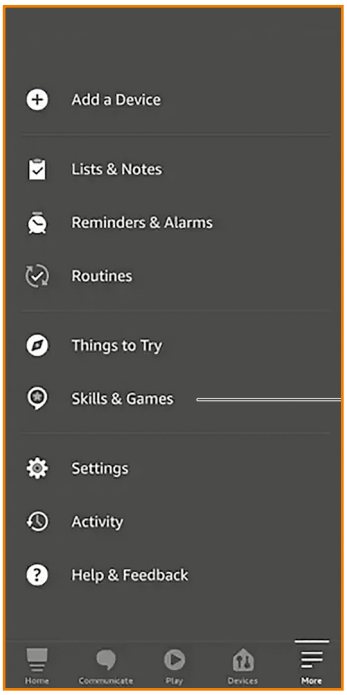

Single press Skills & Games on the pop up list.

3

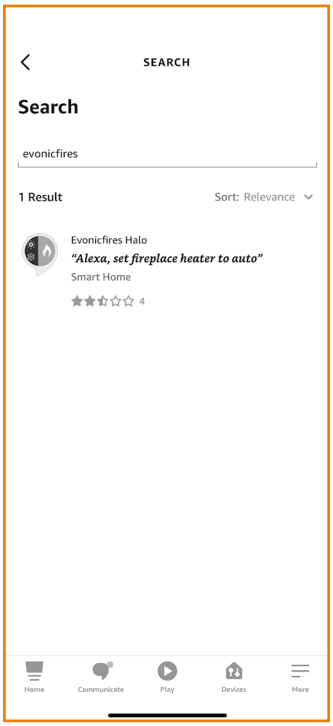

Single press Search and type in evonicfires. Select the Evonicfires Halo skill icon to open.

4

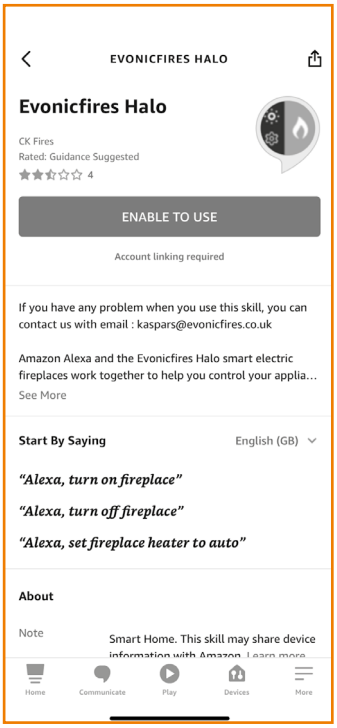

Now on the Evonicfires Halo skill page you can single press the Enable to Use button to go to the log in page.

CONTINUED...

5

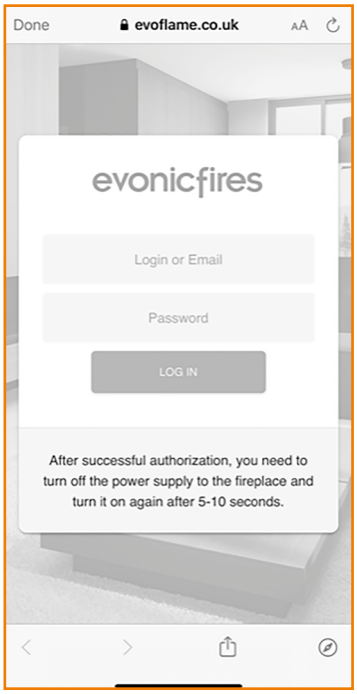

Enter the log in details that you previously entered in the app set up process, and single press Log In.

6

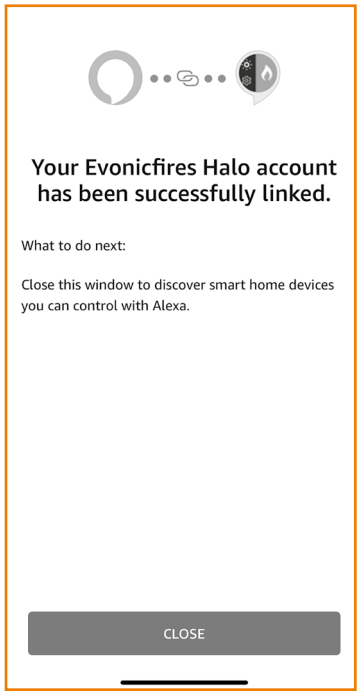

After a few moments your account will be linked, once this is done you can single press Close.

7

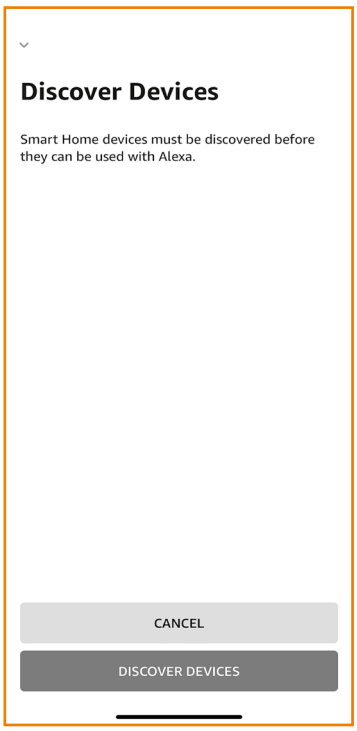

Single press Discover Devices to search for your fire.

8

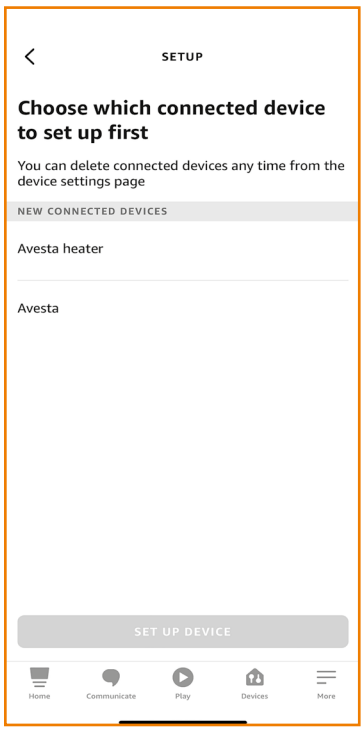

Your fire will show up as two devices, allowing you to programme the heater separately to the effects. Single press the second option, and Set up Device.

CONNECTING TO GOOGLE HOME

1

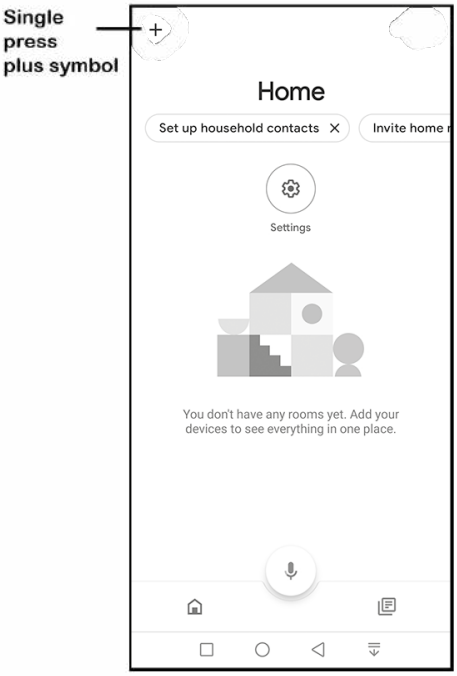

Once your fire is installed, and switched on, download and open the Google Home app. Once open single press the plus symbol in the top left hand corner.

2

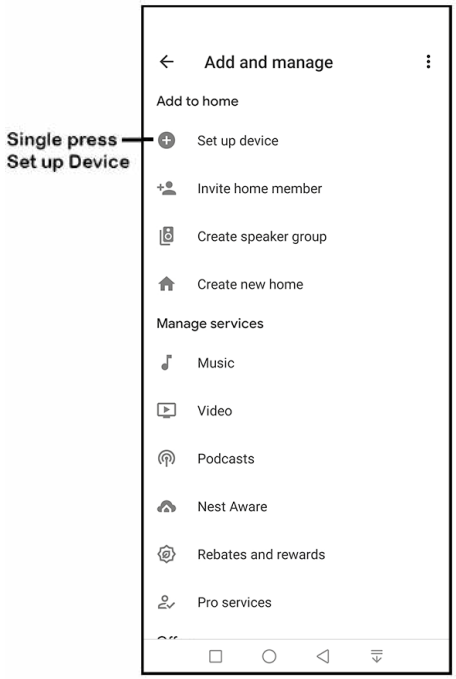

Single press Set up Device on the pop up list.

3

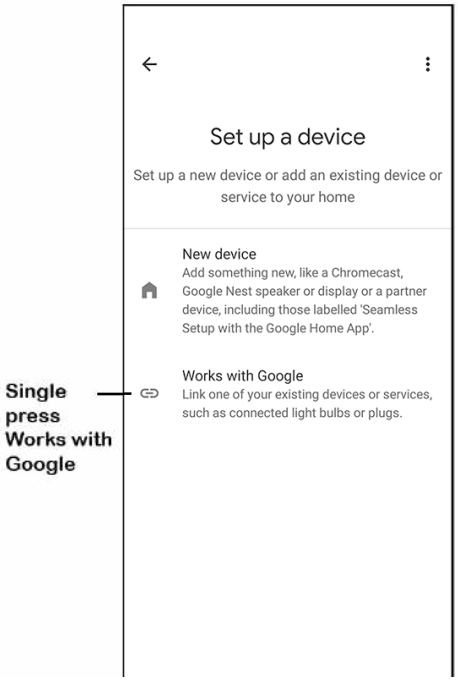

Single press Works with Google.

4

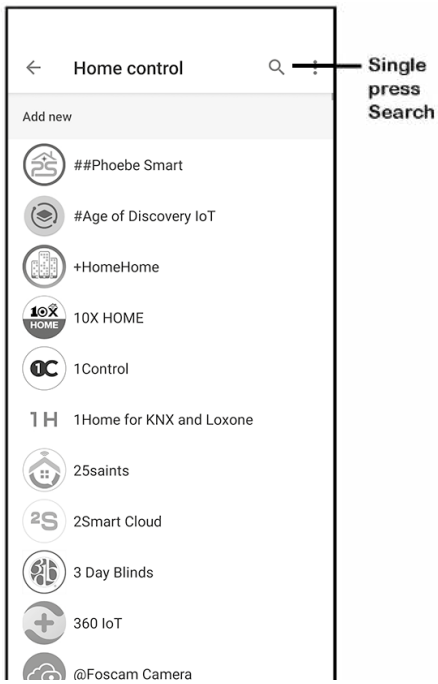

Single press the Search icon in the top right corner.

5

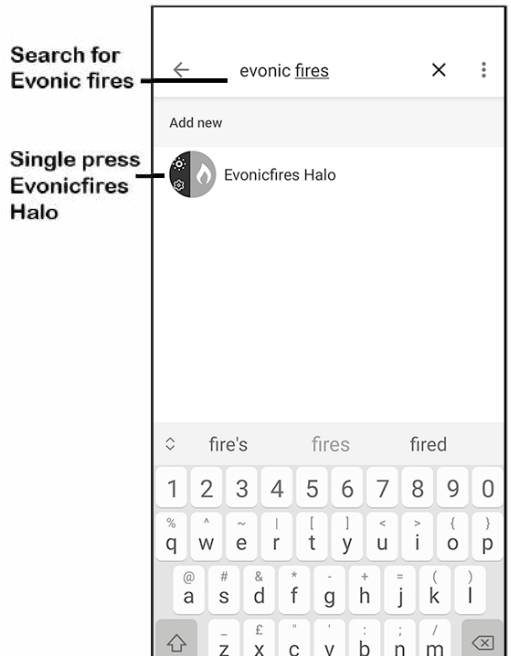

Type in Evonic Fires, single press search and then select the Evonic Fires E-Smart icon.

6

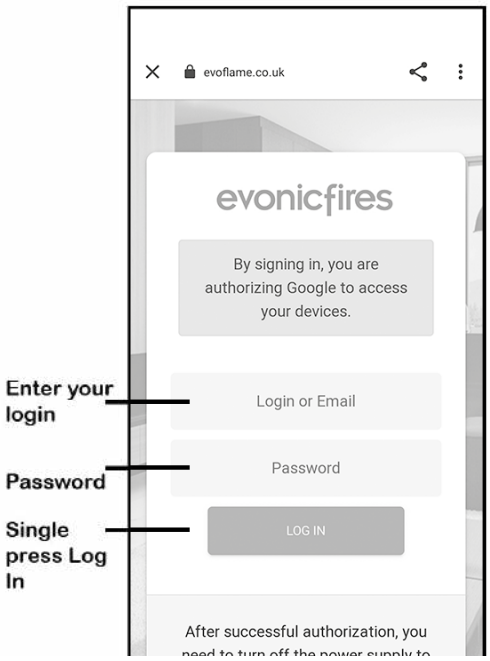

Once in the Evoflame log in page, enter the log in details that you previously entered in the app set up process, and single press Log In. Your appliance is now paired with Google Home!

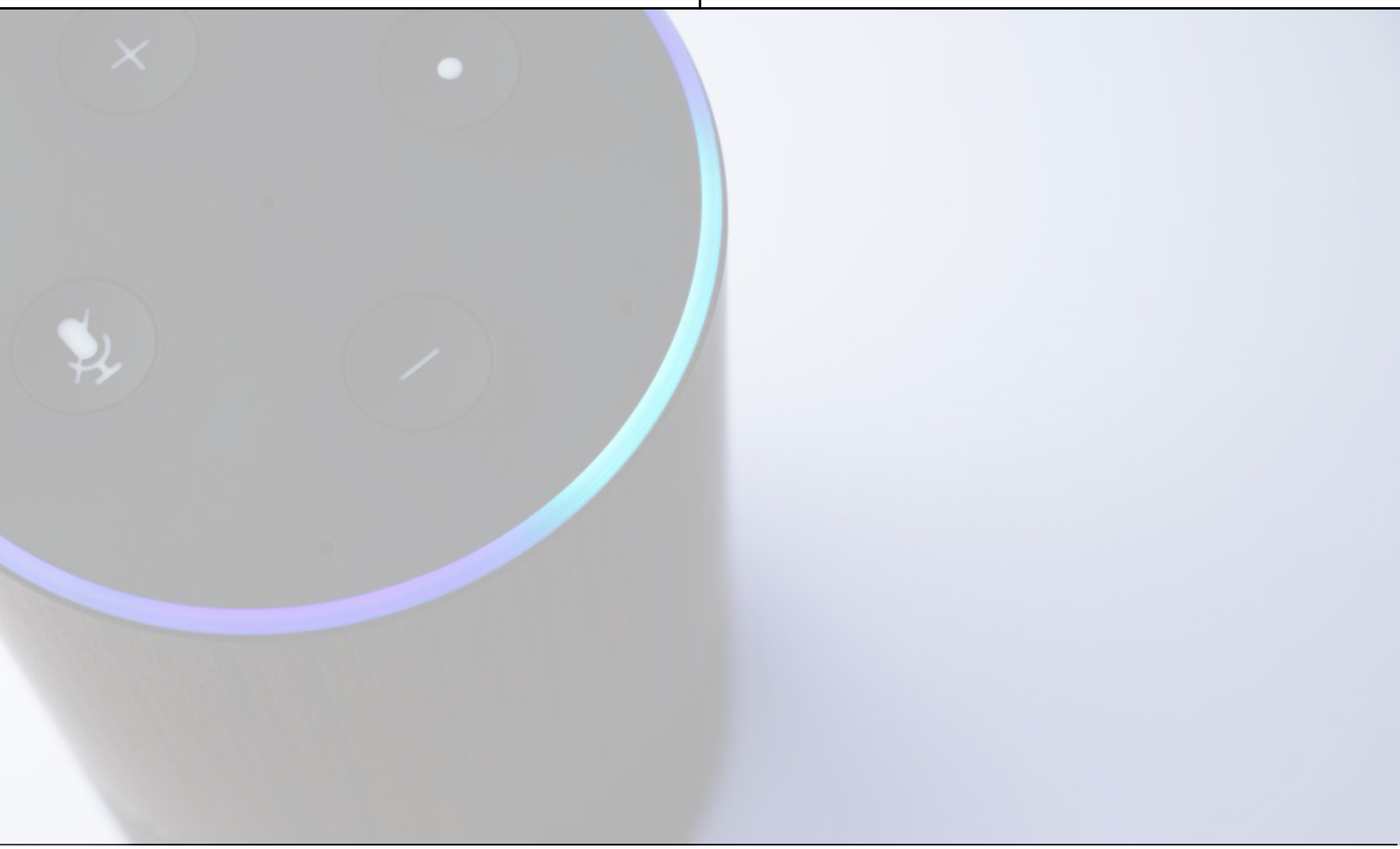

COMMANDS FOR AMAZON ALEXA

When using Amazon Alexa or to control your appliance settings remember to substitute the words 'the fire' for whatever you have named your appliance.

TURNING THE APPLIANCE ON AND OFF

"Alexa, turn fire on." / "Alexa, turn the fire off."

TURNING THE HEATER ON AND OFF

"Alexa, set fire heater to auto." / "Alexa, set fire heater to off."

CHANGING THE TEMPERATURE
ALEXA CAN ONLY CHANGE THE TEMPERATURE BETWEEN 10° & 32°.

"Alexa, set temperature to 27 degrees."

"Alexa, make it warmer in there." - Increases the temperature by 3°

"Alexa, make it cooler in there." - Decreases the temperature by 3°

CHANGING THE FLAME EFFECT

"Alexa, set animation to....."

COMMANDS FOR GOOGLE HOME

When using Google Home to control your appliance settings remember to substitute the words 'the fire' for whatever you have named your appliance. Please note that the Google Home app cannot control the heater in the appliance.

TURNING THE APPLIANCE ON AND OFF

"Ok Google, turn on the fire." / "Ok Google, turn off the fire."

CHANGING THE FLAME EFFECT

"Ok Google, change the animation to ..... on the fire."

RESETTING YOUR FIRE - STANDARD MODELS

Applicable models -

Tuva / Halmstad / Halden

C600 / **C800** / **C900** / e-lectra Banff

If you have entered a wrong email or password during the set-up process, then you may need to reset your fire to factory settings. To do this your fire must be updated to the latest version, you can do this by following the instructions on page 23.

Once your fire is fully updated you can reset it by turning it off and on at the power switch 5 times. Be sure to allow 1 second between each click. There will be an audible beep after this has been done, you can then continue with the set up process on page 18.

RESETTING YOUR FIRE - **BLACK EDITION**

Applicable models -

C600 **Black Edition** / C800 **Black Edition** / C900 **Black Edition**

Camden 4/5

If you have entered a wrong email or password during the set-up process, then you may need to reset your fireplace to factory settings. This can only be done on your remote control.

1. Hold down **'Change log colour'** button until you hear an audible beep.

2. Hold down **'Change ember effect'** button until your hear an audible beep.

Your fire has now been reset to factory settings.

WARRANTY

Evonic Fires 5-year warranty – 1 year parts & labour + 4 years parts supplied.

The above warranty terms and conditions, as of **1st May 2022**, are applicable for all relevant products purchased after this date. Appliances despatched prior to this date will have an alternative warranty as set out within the Installation and User Instructions that was supplied with the product, this was usually a standard 2-year warranty.

To receive your Extended Warranty your Evonic Fires product must have been purchased from an authorised stockist within our Retailer Network and your warranty registered with Evonic Fires through the online form - **evonicfires.co.uk/register-your-product**. The commencement date for the warranty period is the date of purchase. **Your product must be registered within 30 days of purchase to secure the additional warranty term.**

The product must be adequately serviced and maintained. Evonic Fires provide maintenance call outs at a cost, and information on this can be obtained by contacting our head office. Please see your Evonic Installation Instructions for further information on how to service and maintain your appliance.

During your extended warranty period, only parts supplied or authorised by Evonic Fires can be used to repair your fireplace, and these spare parts can be obtained by contacting our service department at **service@evonicfires.co.uk** or calling **01789 263868**.

Consumable items such as glass, screens, LED's, LED boards, filters and power supplies which are either subject to normal wear and tear or parts that require replacement in connection with normal maintenance are not covered within the extended warranty. These items are covered for the first 12 months.

To make a warranty claim, evidence must be supplied to our service department in the form of pictures, videos, or both. Failure to supply evidence to support your warranty claim may invalidate or delay the claim. Any visit by an Evonic Fires engineer will incur a service charge after the first year. We will not accept or reimburse the cost(s) of any third party who undertakes any work carried out on the product or fits parts, unless we have approved such work in advance of it being carried out.

WARRANTY EXCLUSIONS AND LIMITATIONS

The Evonic Extended Warranty does not cover:

1. Damage resulting from installation and usage where the appliance has not been installed or used in accordance with the CK Fires Ltd installation and operation instructions, or if the installation does not conform to local building, fire, and safety regulations.

2. Issues with mains/spur connections of power supply.

3. Damage resulting from the product not being adequately maintained. (Please see your CK Fires Ltd Installation and Operating Instructions for further information on how to service and maintain your appliance).

4. Damage caused by unauthorised modifications, use or repair.

5. Damage or defects caused by the product being stored in a damp, unheated environment.

6. Consequential loss (to the extent permitted by the law) relating to other associated products that have not been supplied by CK Fires Ltd.

7. Consequential loss (to the extent permitted by law) related to decorations, furnishings, or other household assets.

8. Removal and re-installation costs.

WARRANTY EXCLUSIONS AND LIMITATIONS

Repaired or replaced products are covered only for the remainder of the original warranty period. In the event of a claim being made, this must be reported to your retailer or CK Fires Ltd within 14 days of the fault occurring/being noticed. In the event of a product fault occurring during the warranty period years 2-5, CK Fires Ltd will send the appropriate component or goods necessary to rectify the fault, free of charge.

Nothing in the Extended Warranty shall make CK Fires Ltd liable for any or special, incidental, or consequential damages, injury to persons or property, or any other consequential loss beyond the consumer's statutory rights. The liability on these issues is covered by our Terms and Conditions of Sale.

CK Fires Ltd total liability extends only to the purchase price paid for the goods, except where such a limitation is prohibited by statute. CK Fires Ltd, in the event of a warranty claim, reserves the right either to replace the goods in question or to refund the purchase price of the goods. For product sold outside the UK and Ireland, UK law will prevail.

The Evonic Fires Extended Warranty does not affect your statutory rights.

REGISTER YOUR EVONIC FIRE

By registering your product on our website you ensure 4 years parts only cover on top of your standard one year warranty. Scan the QR code to take you directly to the registration page and secure your extra cover.

REPORT A FAULT

If you have any difficulties or problems with your appliance then please get in touch so that we can assist you. Please scan the QR code to be taken to our websites Report a Fault page, we will then be in touch with you shortly.

evonicfires

CK Fires Ltd / Evonic Fires

1, Evonic House, Clifford Park, Clifford Lane,
Stratford-on-Avon, CV37 8HW
Tel: +44 (0)1789 263868 Fax: +44 (0)1789 293080
Email: sales@evonicfires.co.uk
www.evonicfires.co.uk
Follow us on:
Instagram | Facebook | Twitter | LinkedIn
@evonicfires