evonicfires
quality electric fires built in britain

Quality Electric Fires
Built in Britain

NEW PRODUCTS

EVONIC FIRES
GOING GREEN

At Evonic we firmly believe in manufacturing quality electric fires in the most ethical way possible. Once installed into your home, you can rest assured in the knowledge that your Evonic Fire is being powered by one of the most sustainable and cost-effective energy sources available; electric, and the packaging for our fires is constructed using 100% recycled cardboard, resulting in a robust and eco-friendly carton to ensure maximum protection.

EXCELLENCE
MADE IN BRITAIN

At Evonic, we pride ourselves on building award-winning electric fires to the highest possible standards. Using components sourced from leading, local suppliers and manufactured entirely at our factory premises in Stratford-Upon-Avon, Evonic Fires strive to achieve excellence with every product we despatch. If you have any queries once your order arrives, our dedicated sales and service teams are available for any aftercare assistance you may require.

NATIONWIDE
RETAILER NETWORK

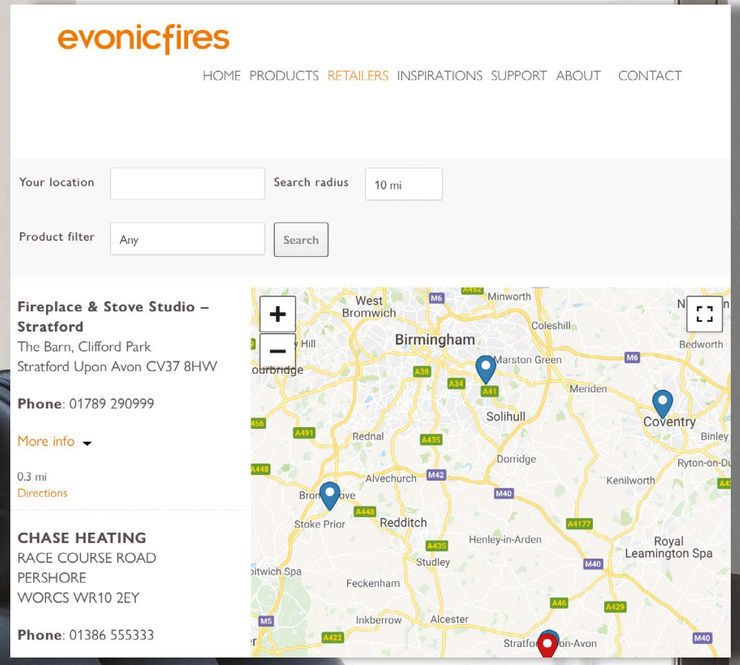

With our extensive network of dedicated retailers, it has never been easier to find the Evonic fire you are looking for. Our website features a detailed search engine to locate your nearest Evonic Fires stockist, and you can even narrow the search down to find particular ranges or models using our product filter tool.

E-SMART

- Brightness adjustment
- Speed adjustment
- Turn your feature lighting on or off
- Drop-down animation selection
- Target room temperature display
- Adjustable temperature gauge
- Available on Apple watch
- Additional animations available
- Optional mood-lighting kit

e-smart technology | works with Google Assistant | WORKS WITH amazon alexa | Download on the App Store | GET IT ON Google Play

Woodland split logs

Silver birch split logs

Optional mood-lighting kit

FEATURES

BESPOKE FUEL BED & LOG SET

Each Evonic Fires model comes complete with a bespoke fuel bed & log set, chosen specifically by our design team to enhance the aesthetic of your fire.

SCHOTT® GLASS

Our fireplaces utilise the latest **SCHOTT®** glass to enhance the clarity of your flame effect. **SCHOTT®** is a market leader in glass production, and their products encompass optical interference properties, allowing up to a **90%** reduction in surface reflections on all fires where **SCHOTT Conturan Magic®** is shown. **SCHOTT Clear Float®** glass is produced using the float process, resulting in glass that has a perfectly flat and parallel surface which is available on all fires where **SCHOTT Clear Float®** is displayed.

LED TECHNOLOGY

By using the very latest LED lighting technology, Evonic Fires produce some of the most vibrant and realistic electric fires in the world.

Please note: *Evonic Fires prides itself on constant development and innovation. We therefore reserve the right to alter the specification of any Evonic product without formal notice. The images in this brochure are produced using photography and CGI. Although the utmost care has been taken to accurately portray our products, we always advise a viewing in person at an approved Evonic Fires retailer's showroom.*

ASTA

works with Google Assistant

WORKS WITH amazon alexa

GET IT ON Google Play

Download on the App Store

- **1752**mm flame effect
- Extended opening height
- 1500W heat output
- **SCHOTT CONTURAN MAGIC®** anti-reflective front glass
- Woodland or silver birch split logs
- **e-smart cloud** app controlled
- Choice of multiple flame effects
- Over-bed illumination
- Independent fuel bed settings
- Optional mood lighting kit
- Two or three sided conversion panels included
- Opening size - **W** *1752mm* **H** *455mm*

GF3 **model shown with** *Still* **effect**

GF3 **model shown with** *Aurora* **effect**

LITA

- **1503**mm flame effect
- Extended opening height
- 1500W heat output
- **SCHOTT CONTURAN MAGIC®** anti-reflective front glass
- Woodland or silver birch split logs
- **e-smart cloud** app controlled
- Choice of multiple flame effects
- Over-bed illumination
- Independent fuel bed settings
- Optional mood lighting kit
- Two or three sided conversion panels included
- Opening size - **W** *1503mm* **H** *455mm*

GF2 **model shown with** *Still* **effect**

GF3 **model shown with** *Odyssey* **effect**

EXOR

- **1255**mm flame effect
- Extended opening height
- 1500W heat output
- **SCHOTT CONTURAN MAGIC®** anti-reflective front glass
- Woodland or silver birch split logs
- **e-smart cloud** app controlled
- Choice of multiple flame effects
- Over-bed illumination
- Independent fuel bed settings
- Optional mood lighting kit
- Two or three sided conversion panels included
- Opening size - **W** *1255mm* **H** *460mm*

GF3 **model shown with** *Spectrum* **effect**

GF3 **model shown with** *Still* **effect**

SKARA

- **650**mm flame effect
- 1500W heat output
- **SCHOTT CONTURAN MAGIC®** anti-reflective front glass
- Woodland or silver birch logs
- **e-smart cloud** app controlled
- Choice of multiple flame effects
- Over-bed illumination
- Independent fuel bed settings
- Optional mood lighting kit
- 180mm deep
- Opening size - **W** *654mm* **H** *682mm*

MALMO

- **750**mm flame effect
- 1500W heat output
- **SCHOTT CONTURAN MAGIC®** anti-reflective front glass
- Woodland or silver birch logs
- **e-smart cloud** app controlled
- Choice of multiple flame effects
- Over-bed illumination
- Independent fuel bed settings
- Optional mood lighting kit
- 180mm deep
- Opening size - **W** *754mm* **H** *752mm*

OBERON

- 750/1500W heat outputs
- Ceramic log set
- **evoflame®** effect
- Concealed top heater
- Cast frame and ashpan
- **75**mm deep
- Fits into **16** x **22"** opening
- Available in black nickel, chrome or gold

STRELLAR

- 750/1500W heat outputs
- Glass fronted
- Ceramic log set
- **evoflame®** effect
- Cast frame and ashpan
- **75**mm deep
- Fits into **16** x **22"** opening
- Available in black nickel, chrome or gold

SPECIFICATION

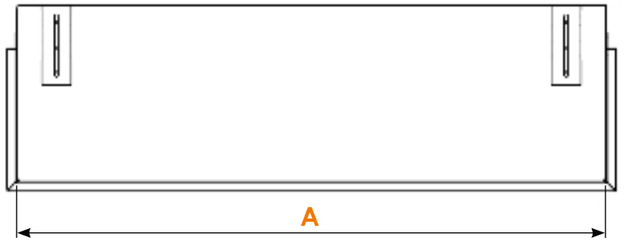

A - Width excl. plaster kit
B - Width incl. plaster kit
C - Opening height
D - Depth excl. plaster kit
E - Height

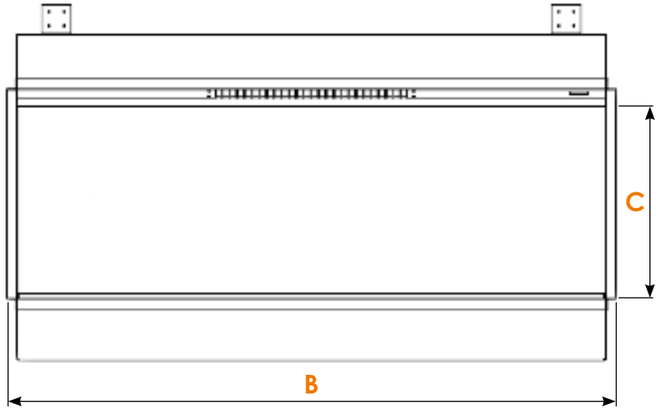

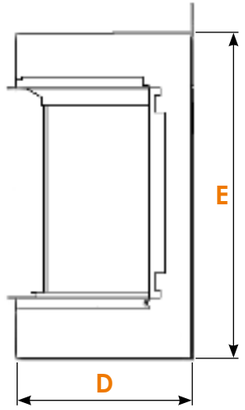

MODEL	A	B	C	D	E
Asta XT	1752mm	1784mm	455mm	300mm	658mm
Lita XT	1503mm	1535mm	455mm	300mm	659mm
Exor XT	1255mm	1285mm	460mm	300mm	659mm
Skara	654mm	702mm	682mm	180mm	897mm
Malmo	754mm	802mm	752mm	180mm	967mm
Oberon	515mm	**N/A**	350mm	200mm	615mm
Strellar	515mm	**N/A**	350mm	200mm	615mm

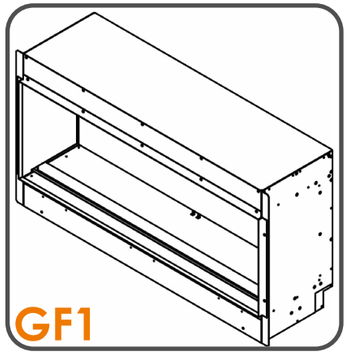

Glass Fronted

A single glass panel at the front of the appliance.

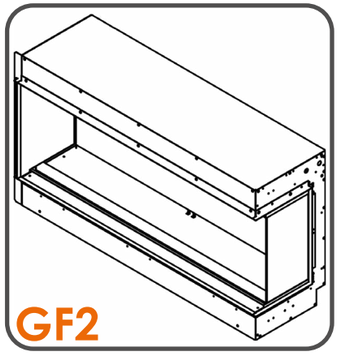

Glass Fronted 2

A glass panel at the front and one side piece of glass. The glass can be either side.

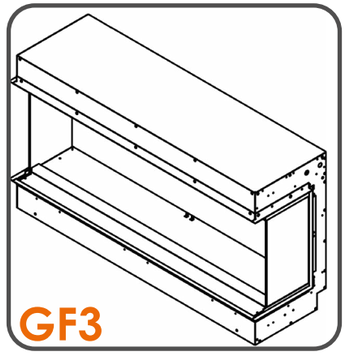

Glass Fronted 3

The standard configuration. A glass panel at the front and both side pieces of glass.

evonicfires

1 Evonic House, Clifford Park, Clifford Lane,
Stratford-upon-Avon, Warwickshire, CV37 8HW
TEL: **01789 263868** | FAX: **01789 293080**
www.evonicfires.co.uk | sales@evonicfires.co.uk