evonicfires

Quality Electric Fires
Built in Britain

Built-Ins specification booklet

Contents

Sirus	3
Karlstad/e2400	4
Avesta/e1800	5
Linnea/e1500	6
Kiruna/e1030/Valter	7
Lindstrom DS/e1030 DS	8
Tyrell/e800	9
Motala/e1250	10
Newton 10/e1000	11
Newton 9/e900	12
Newton 7/e700	13
Newton 6/e600	14
Kallan/e730	15
Thoren/e630	16
e1560	17
e810	18
Stora DS	19
e500	20
e710	21
e640	22

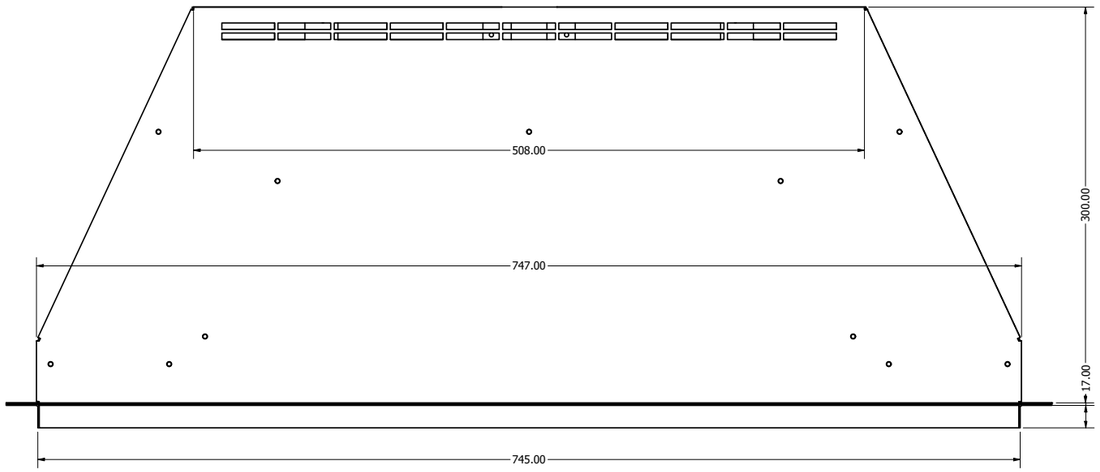
508.00
747.00
745.00
300.00
17.00

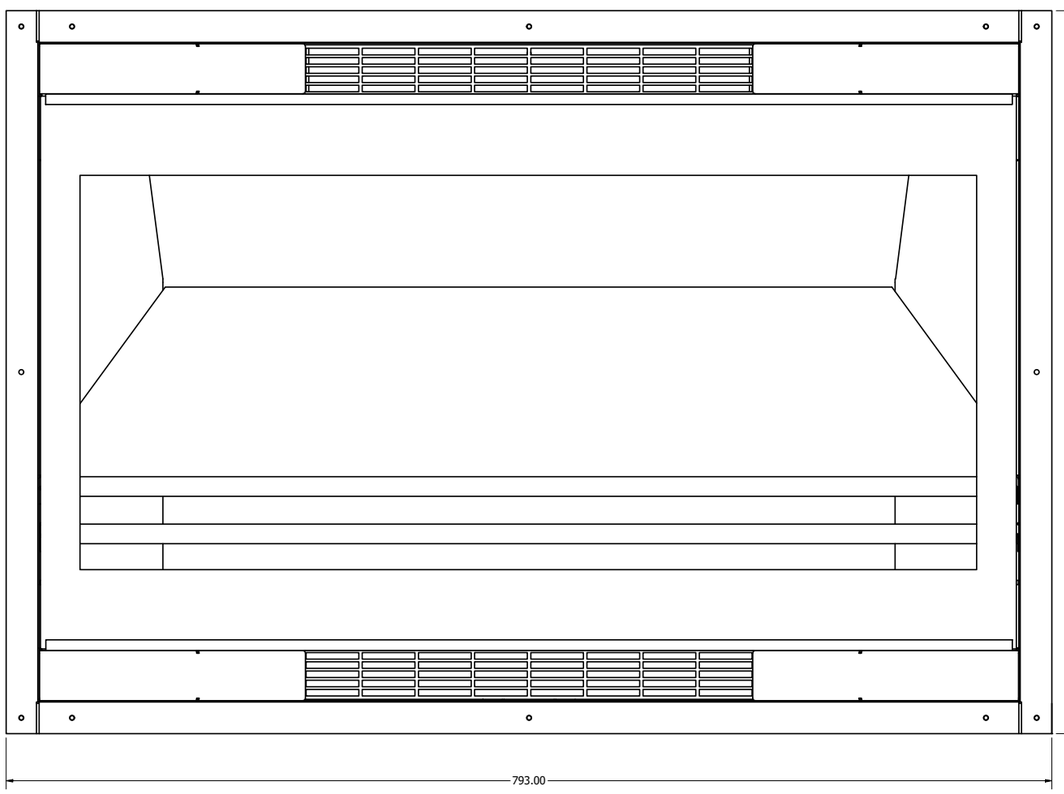
793.00
548.00

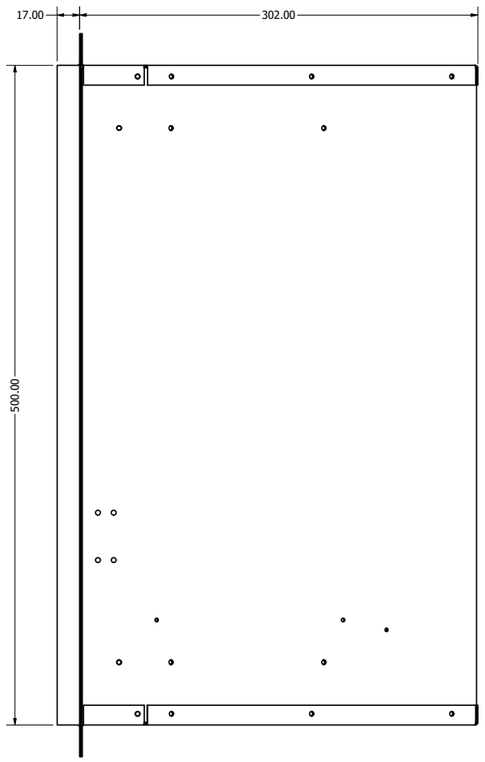
17.00
302.00
500.00

Karlstad/E2400

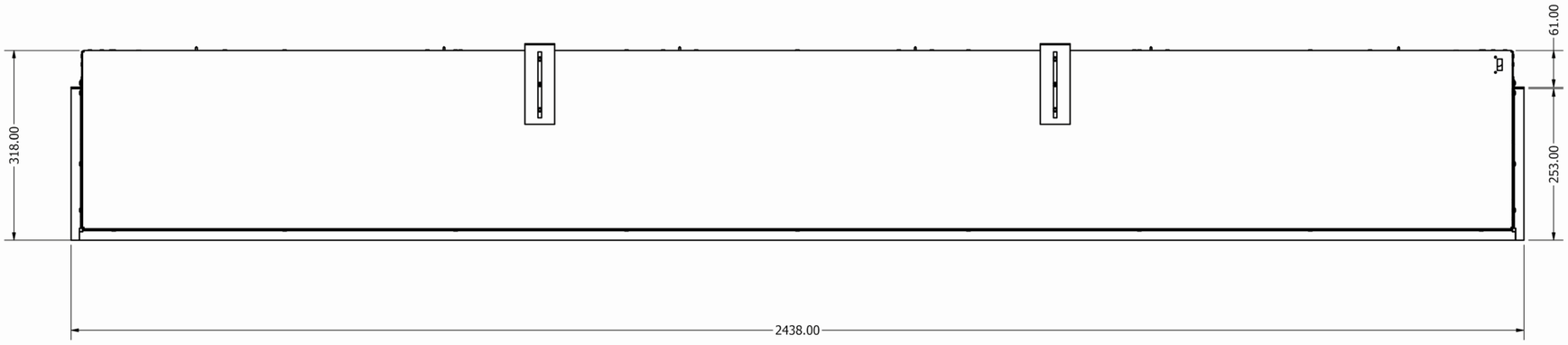

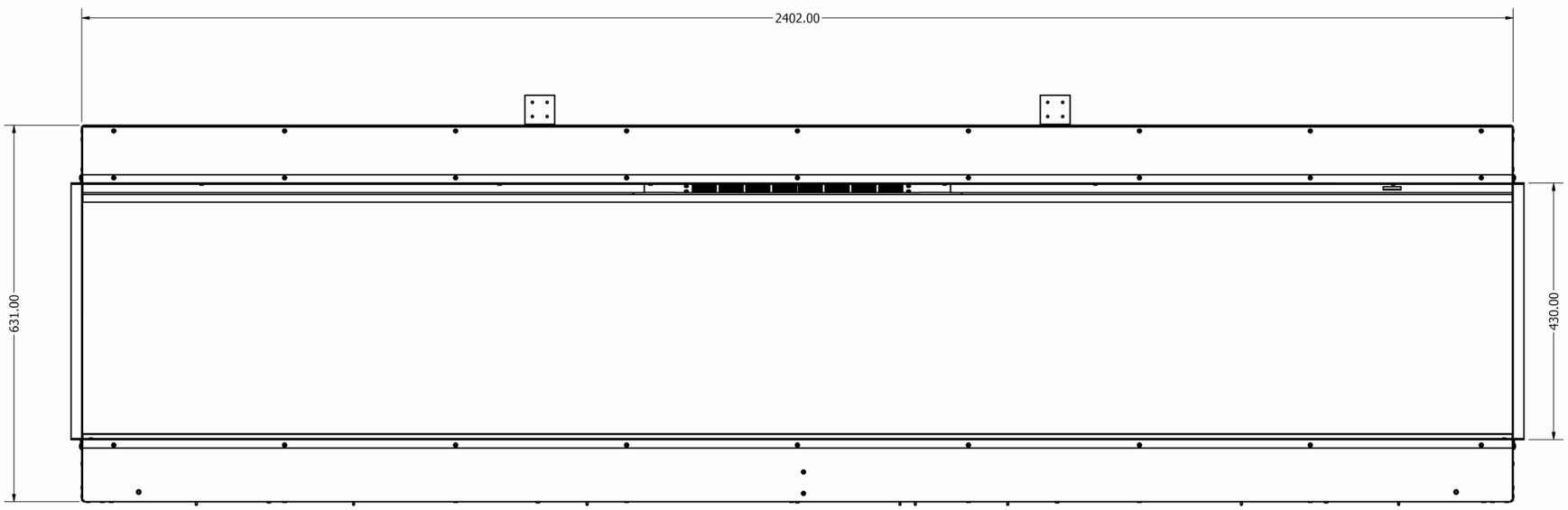

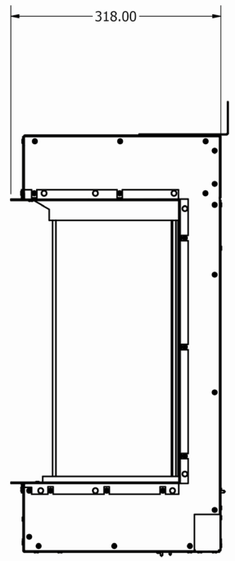

Avesta/E1800

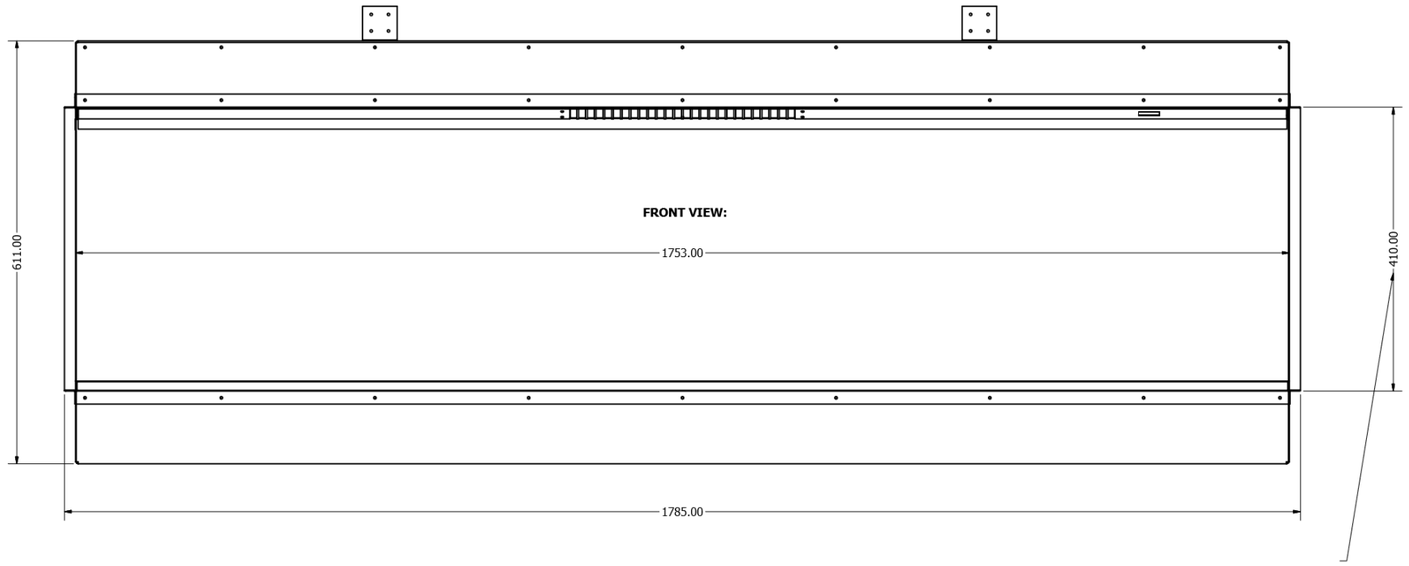

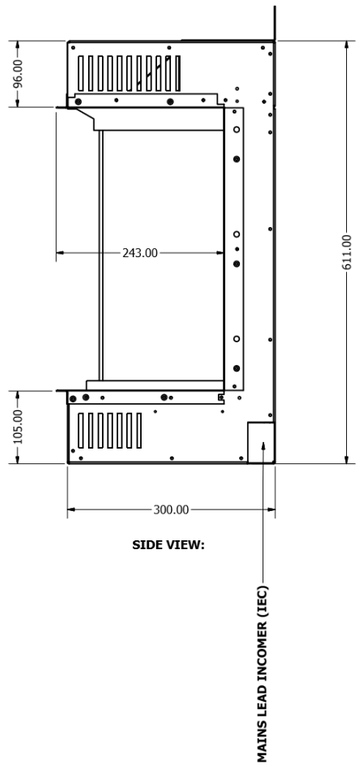

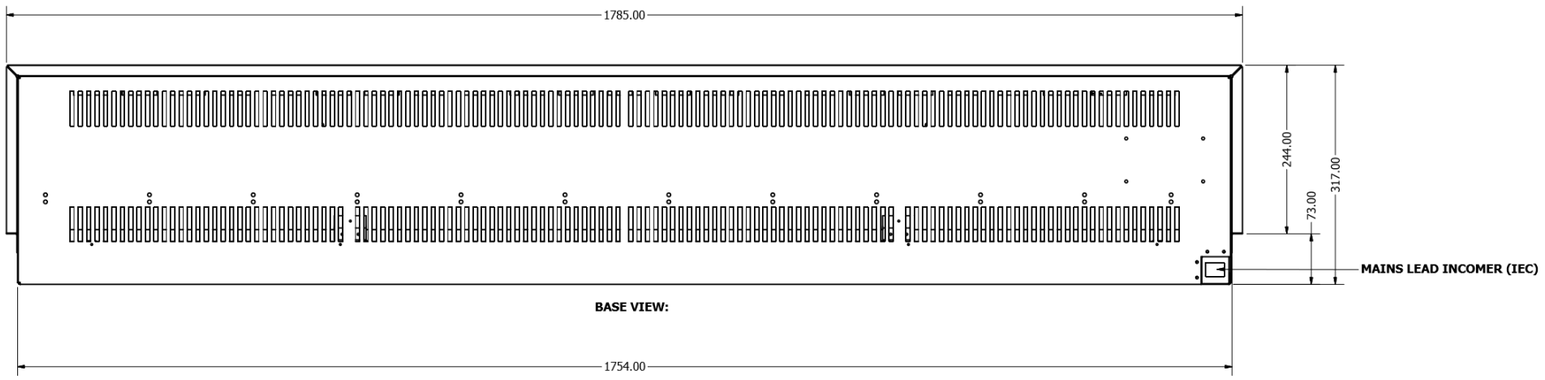

Linnea/E1500

LINNEA WITH TILE WING

WIDTH - 1914mm

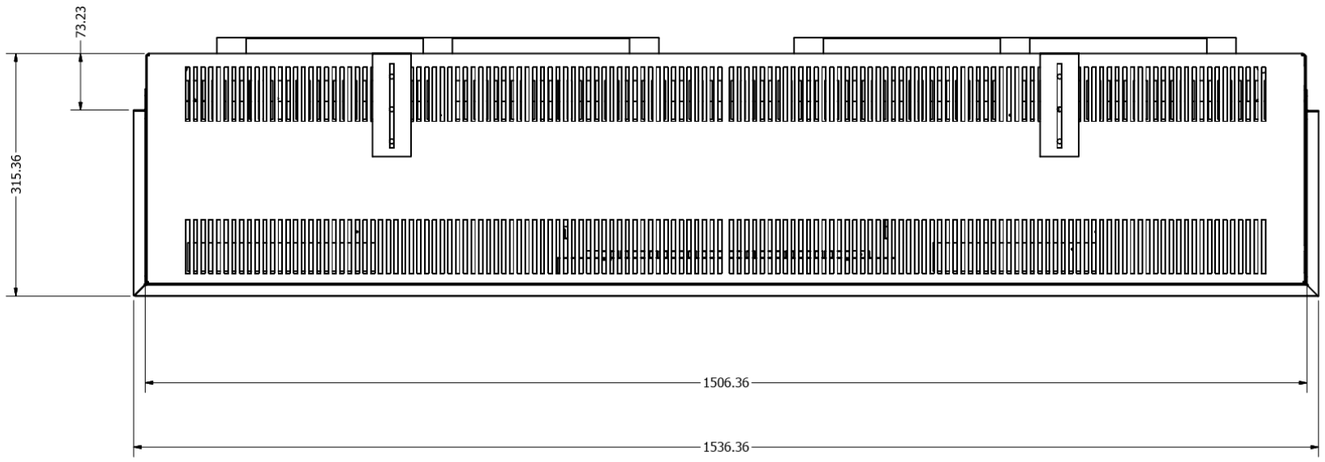

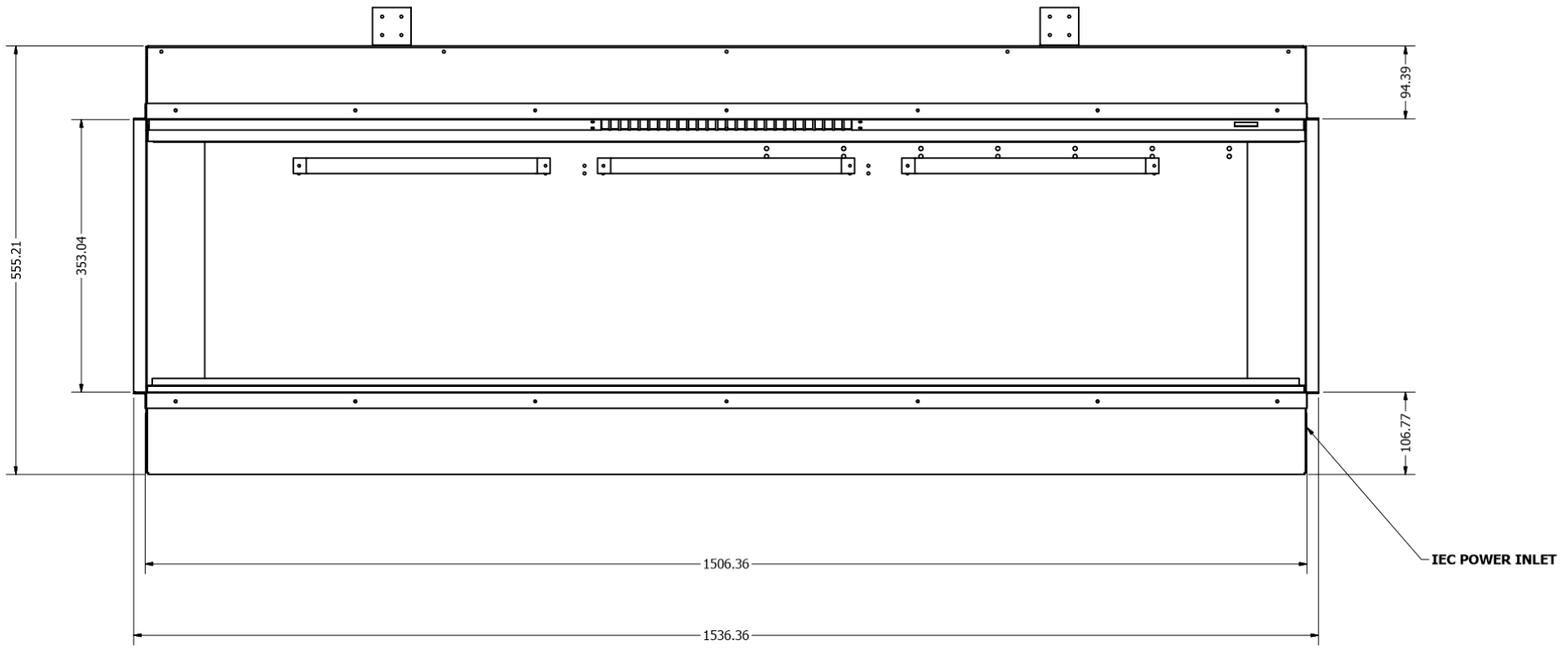

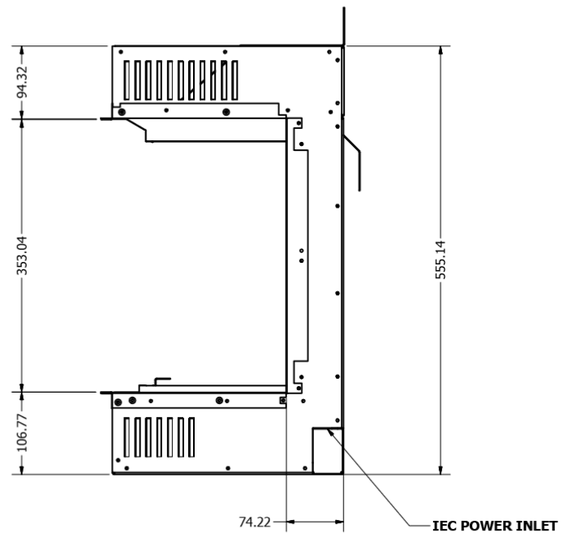

Kiruna/E1030/Valter

KIRUNA WITH TILE WING

WIDTH - 1418mm
HEIGHT - 570mm

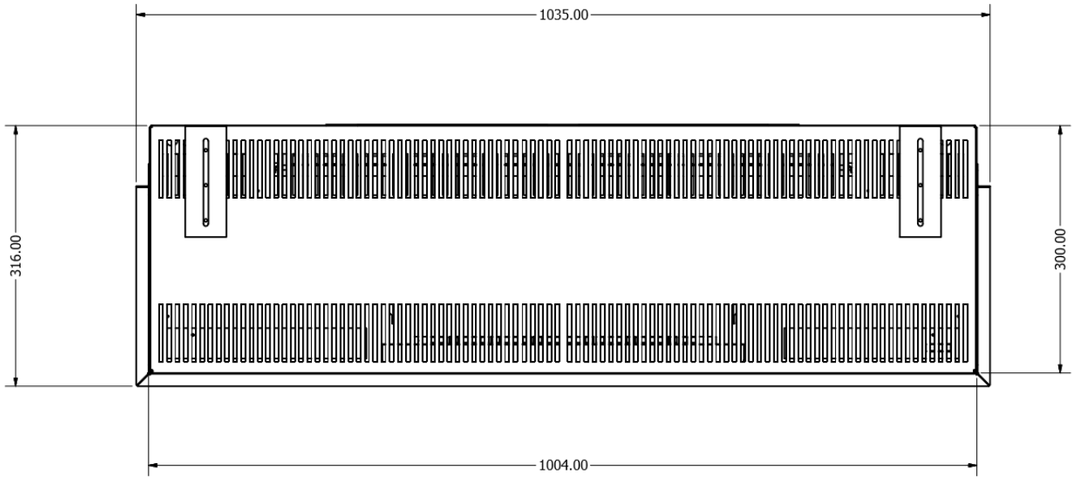

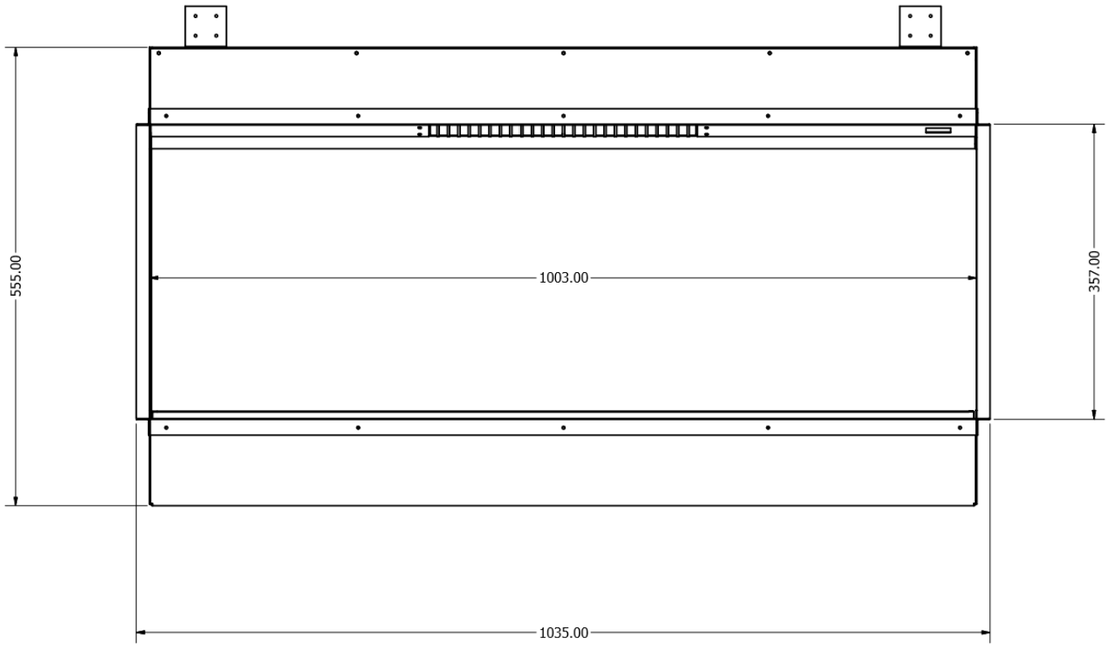

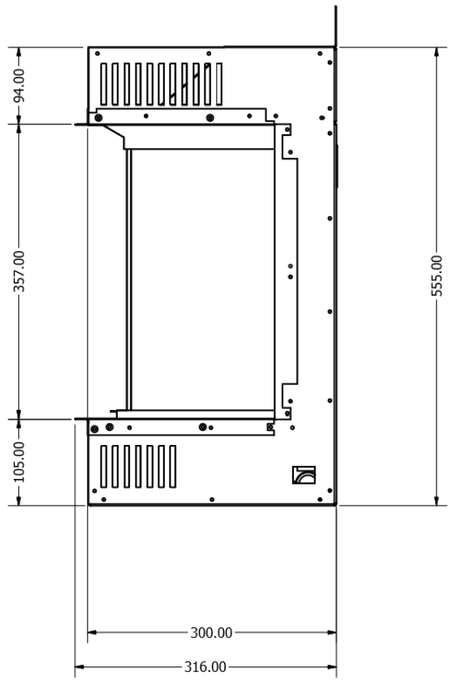

Lindstrom/E1030DS

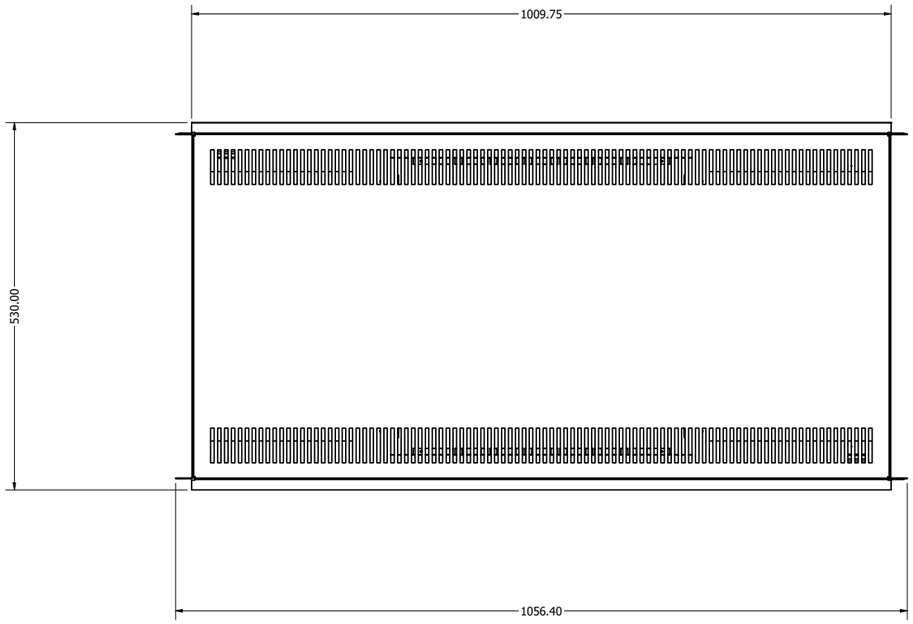

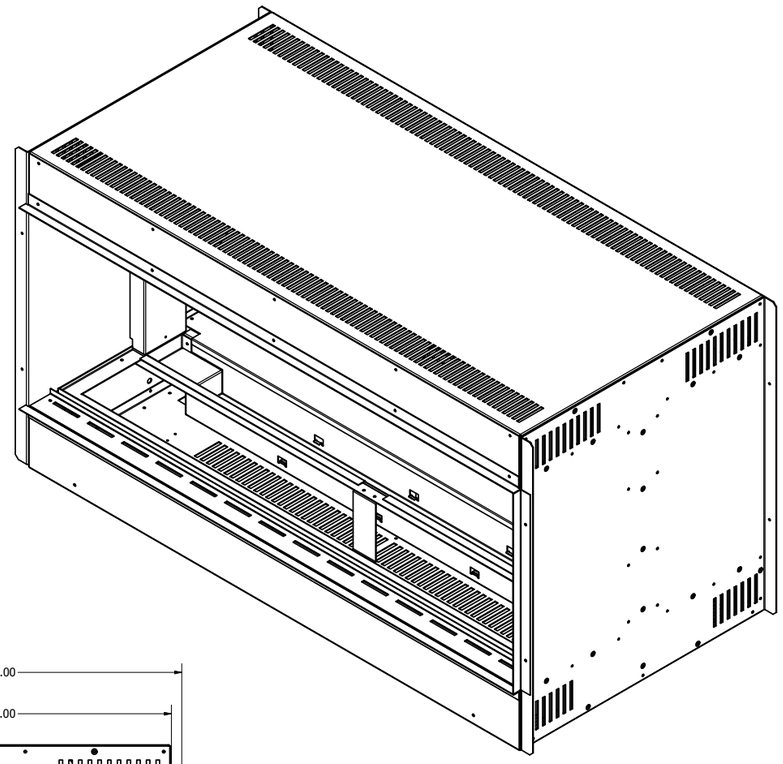

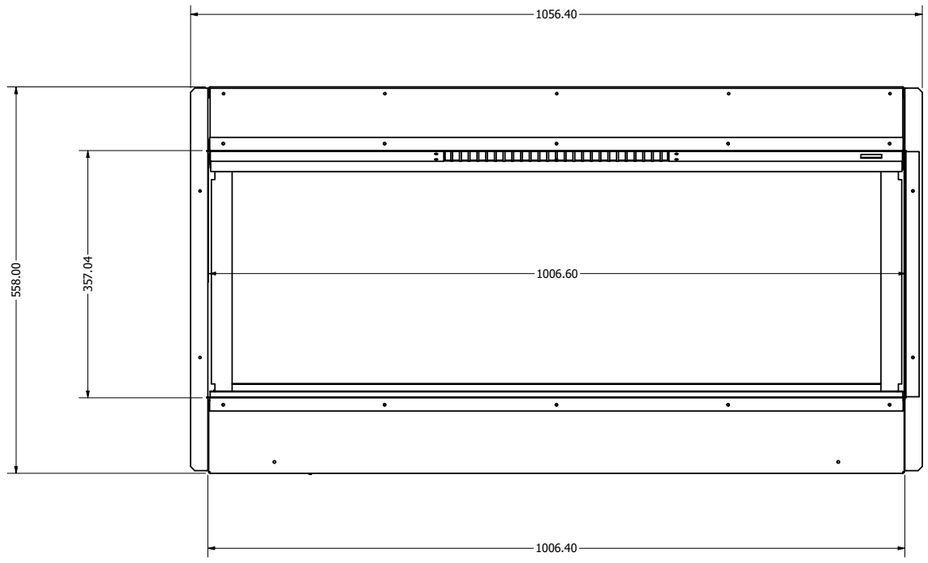

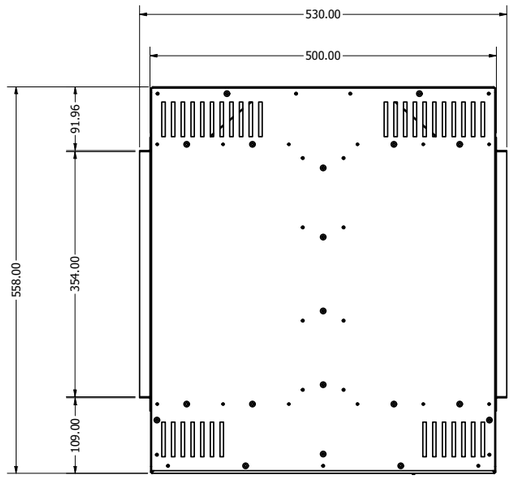

Tyrell/E800

TYRELL WITH TILE WING

WIDTH - 1188mm

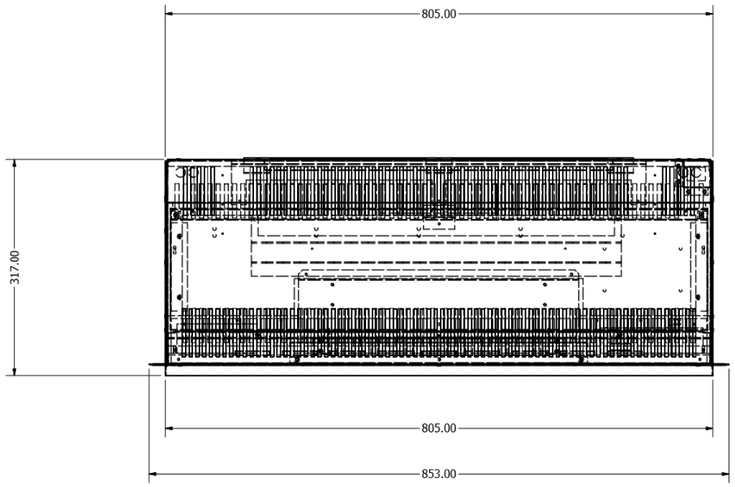

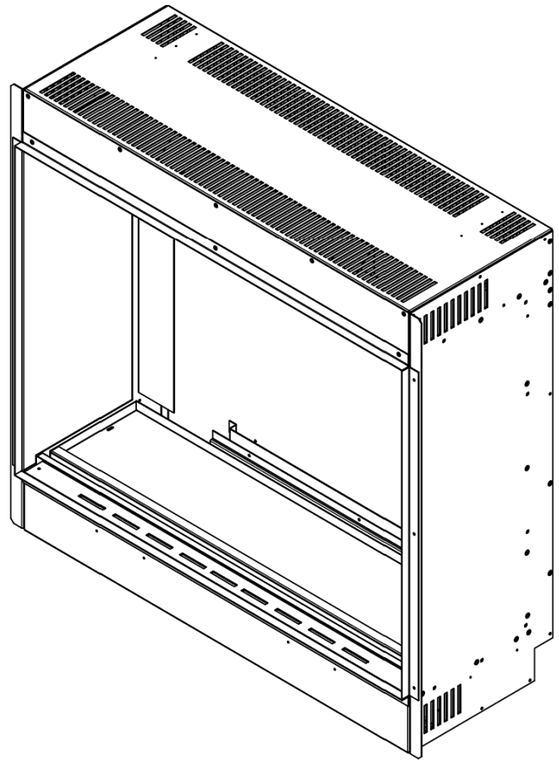

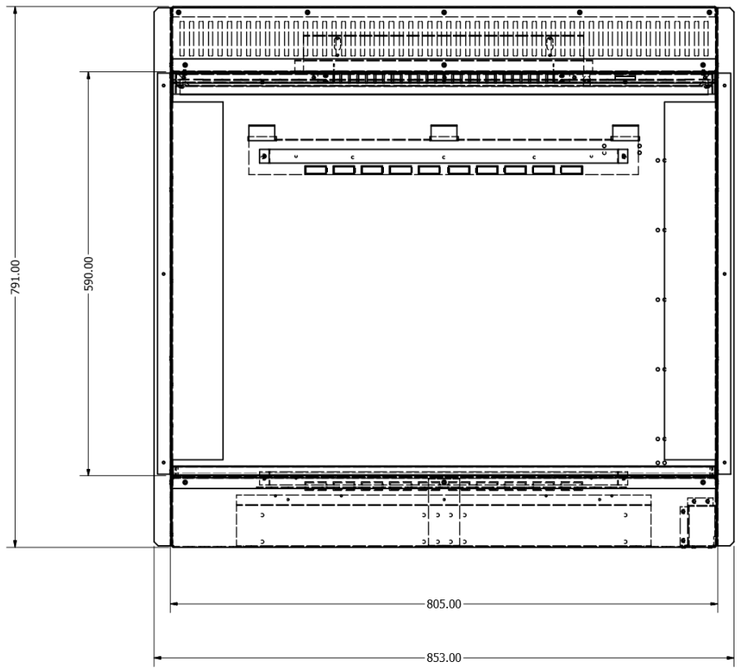

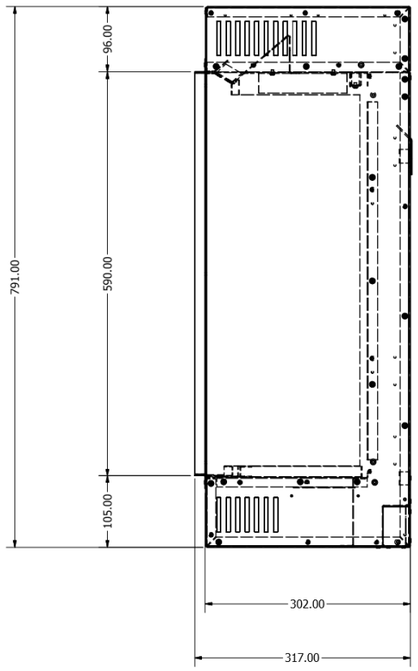

SCALE 1 / 4 SHEET 1 OF 1

Motala/E1250

MOTALA WITH TILE WING

WIDTH - 1668mm

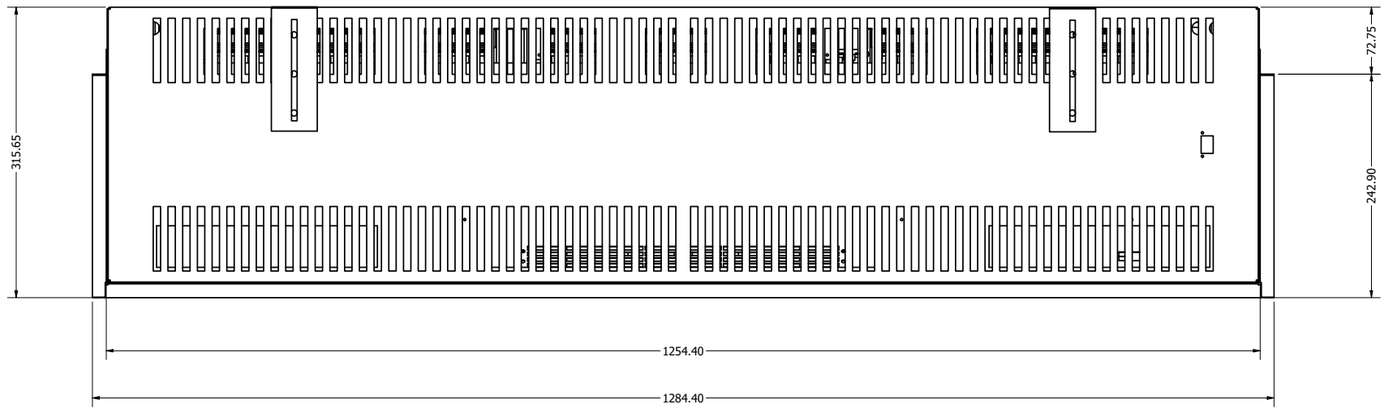

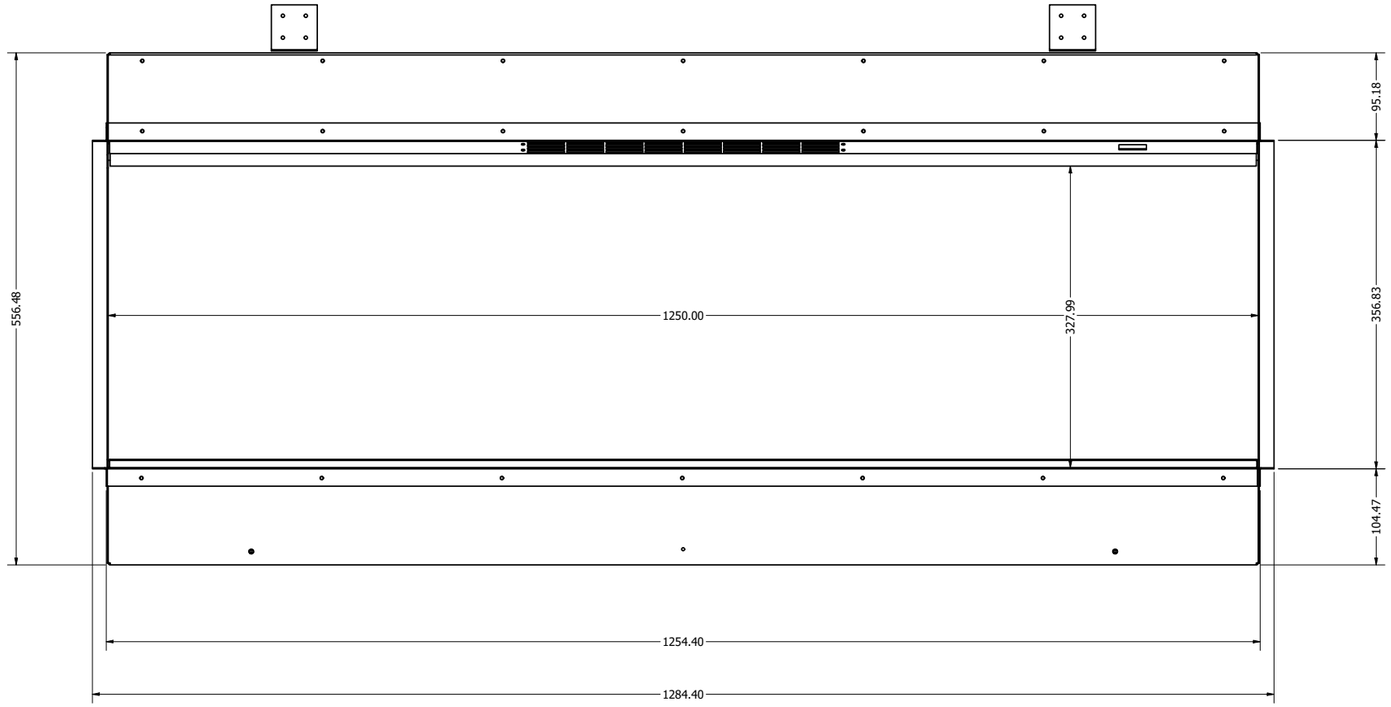

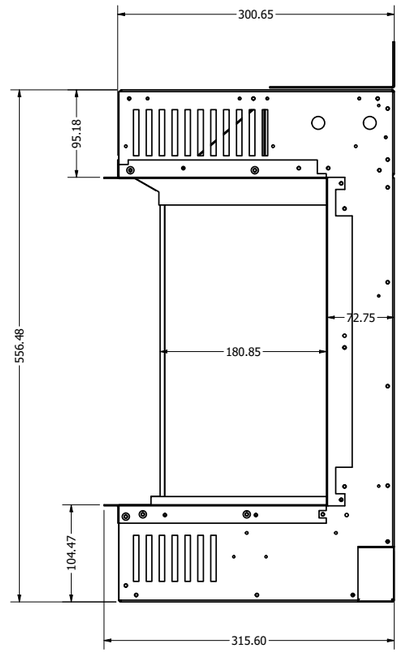

Newton 10/E1000

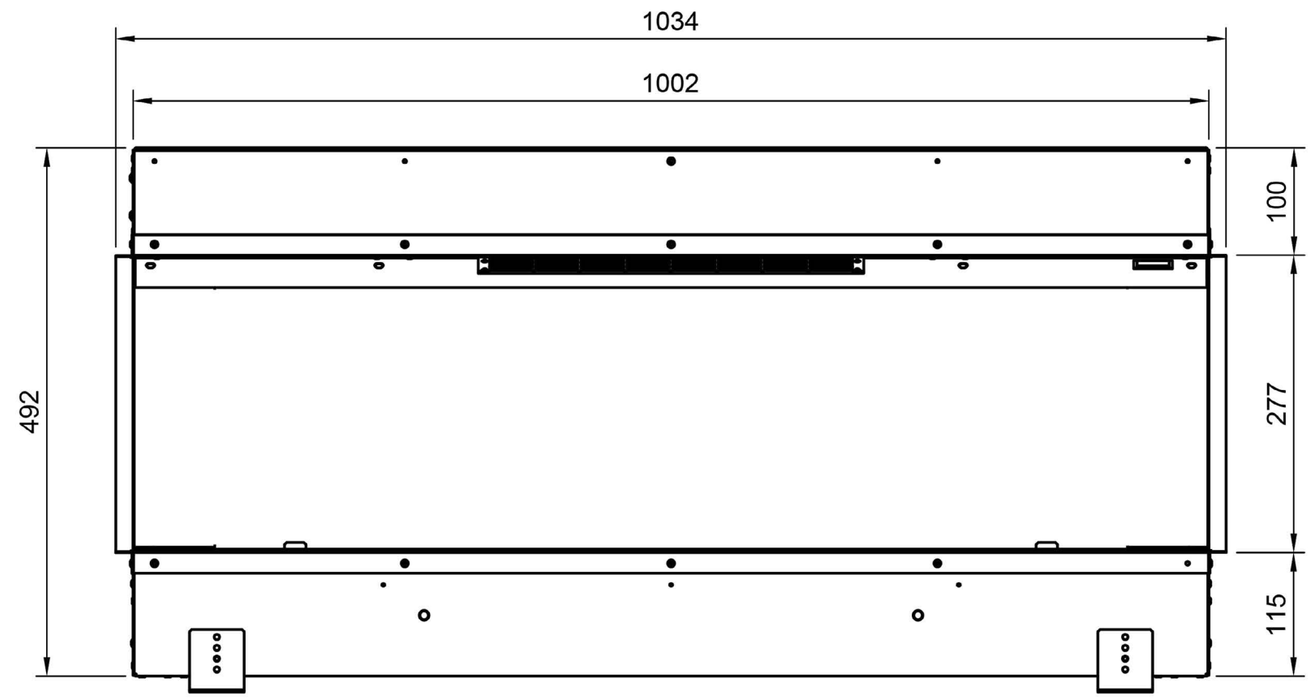

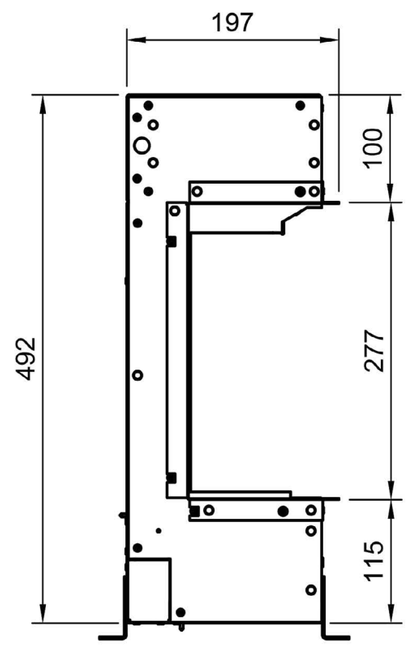

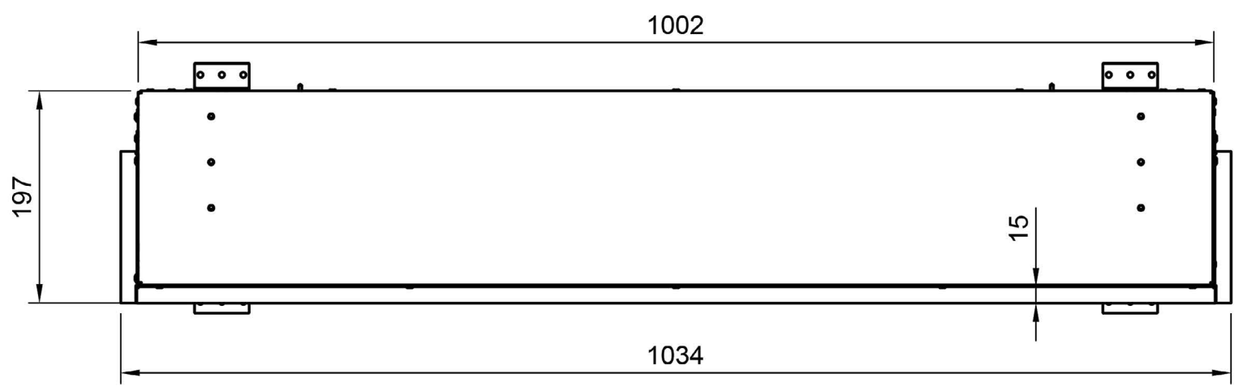

Newton 9/E900

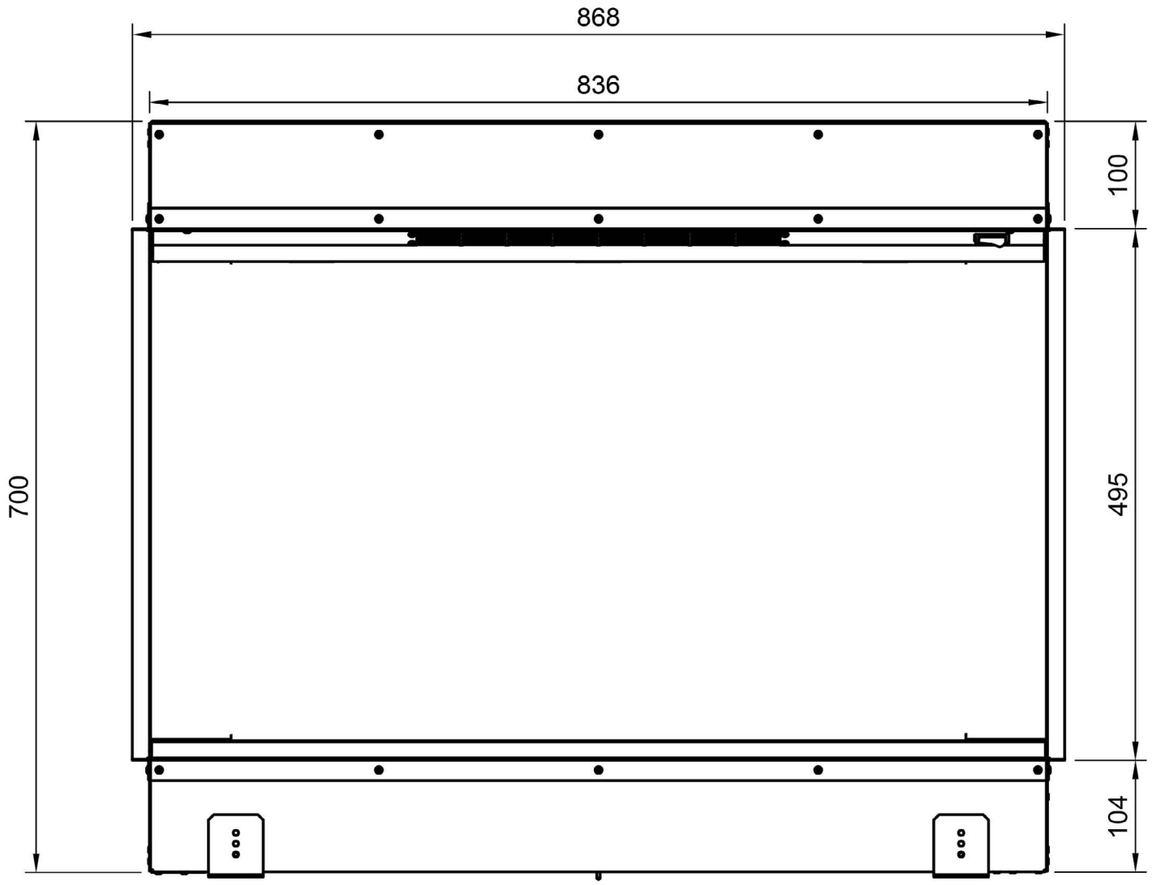

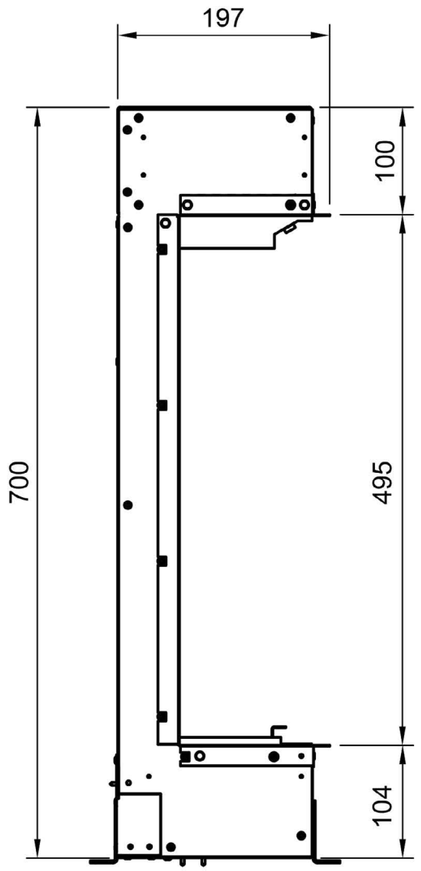

Newton 7/E700

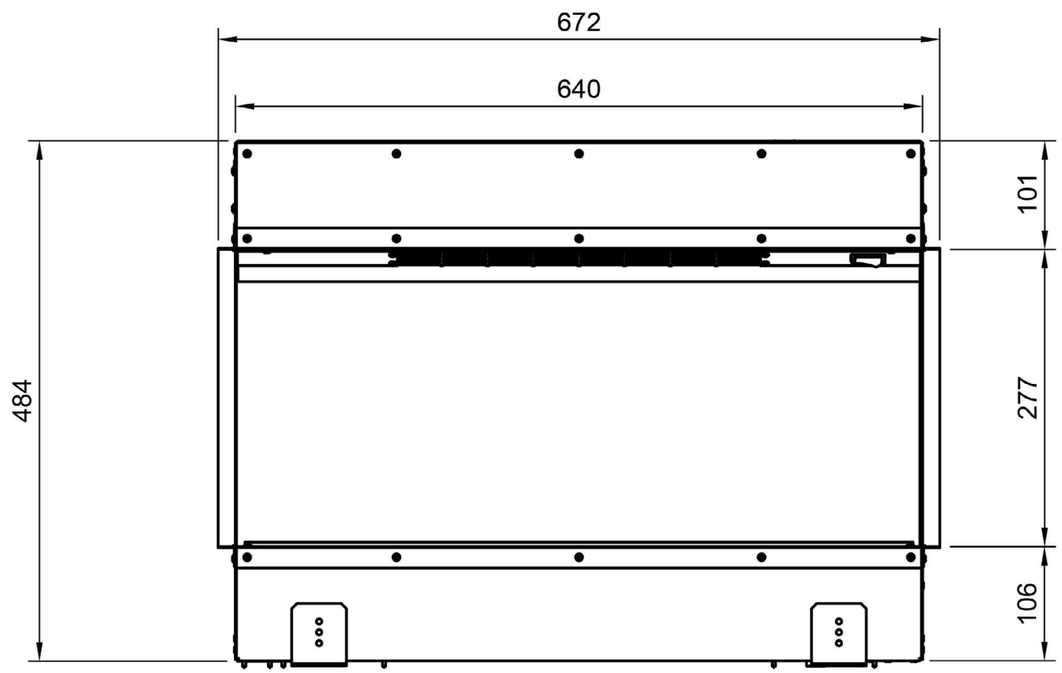

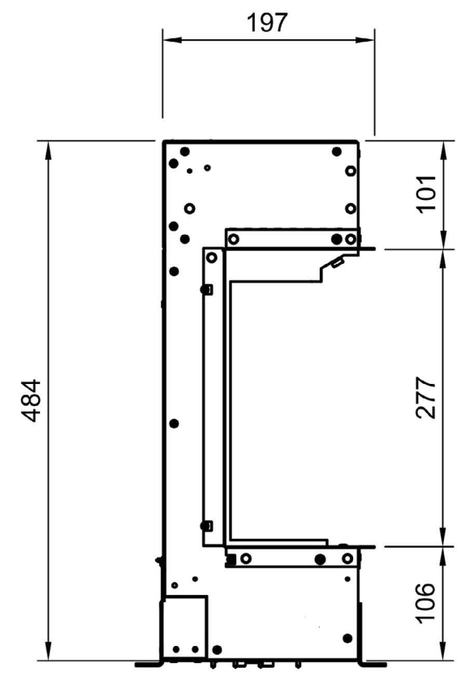

Newton 6/E600

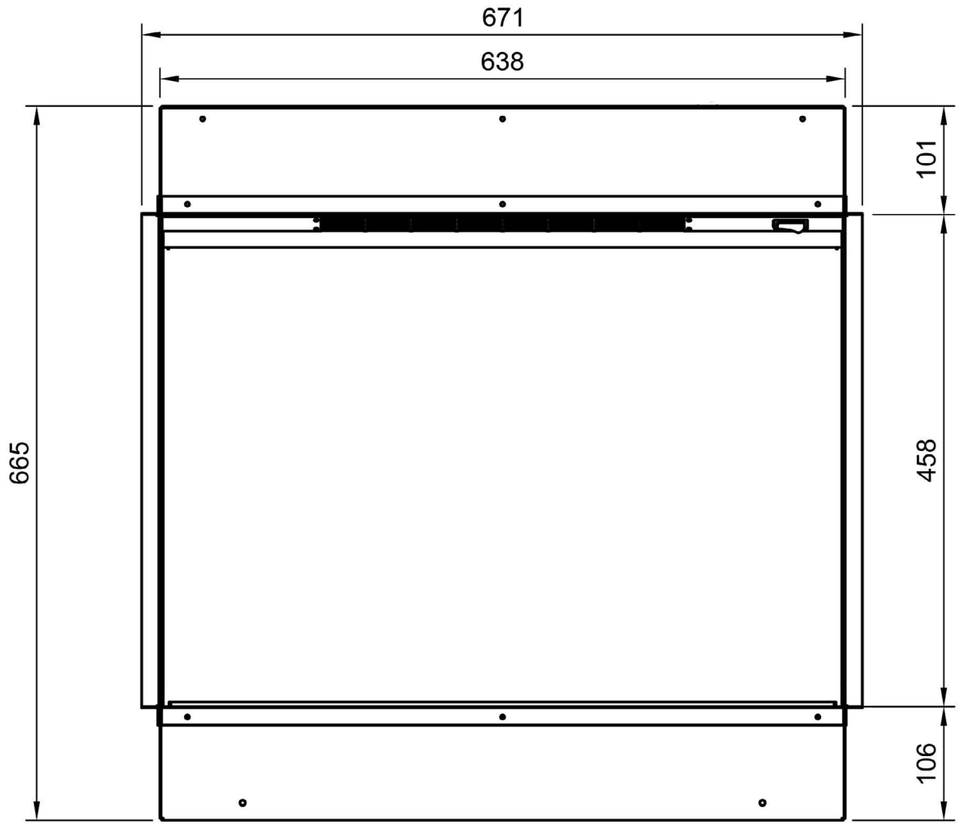

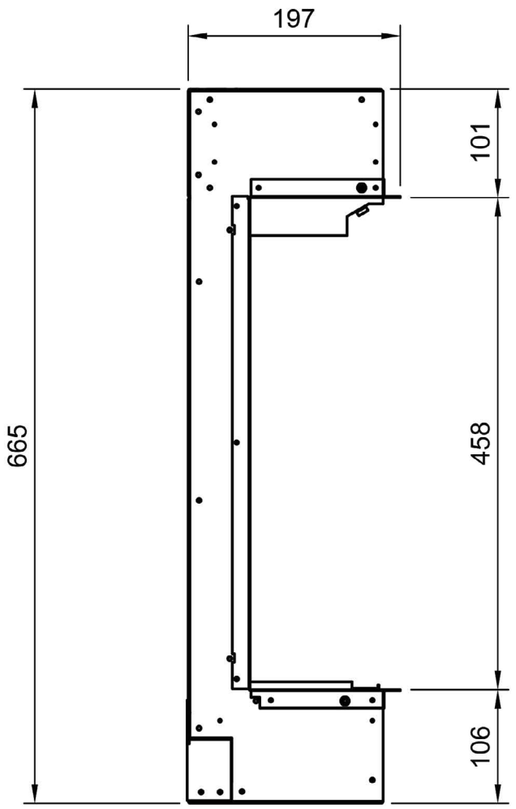

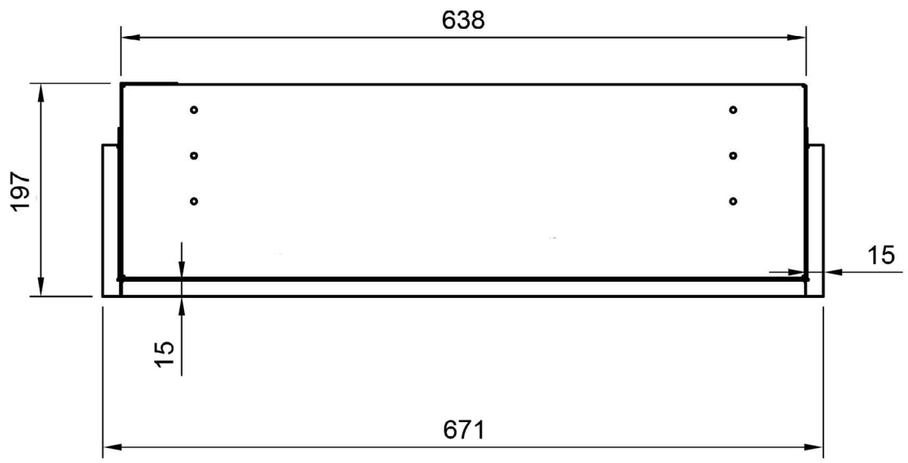

Kallan/E730

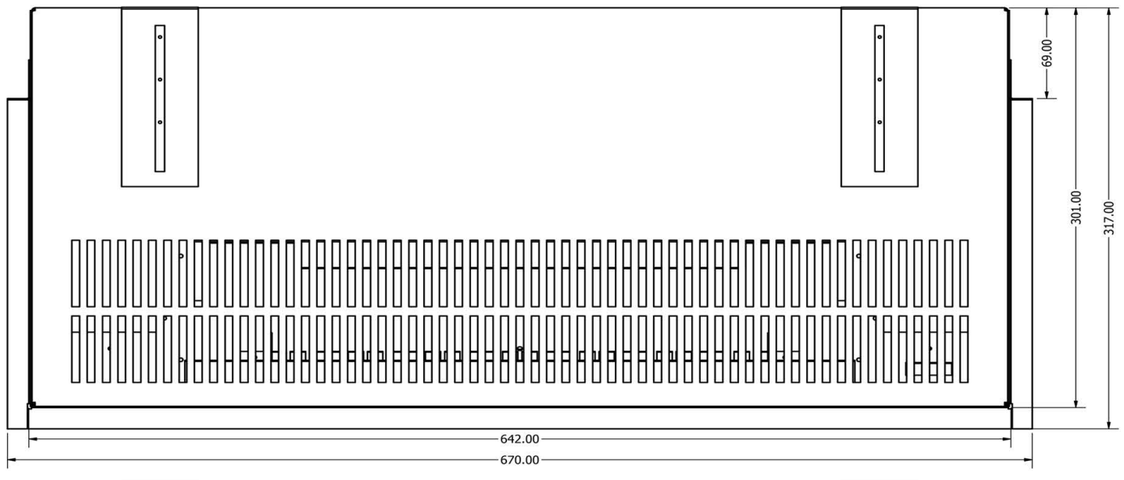
69.00
301.00
317.00
642.00
670.00

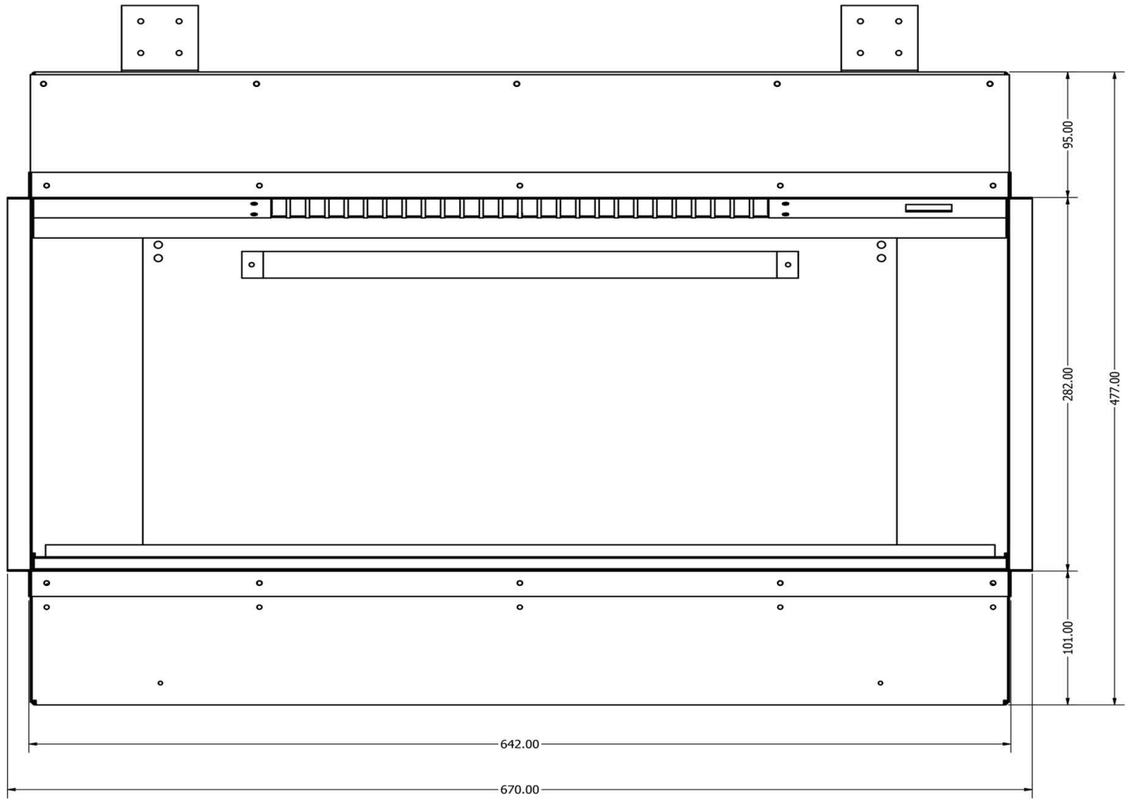
95.00
282.00
477.00
101.00
642.00
670.00

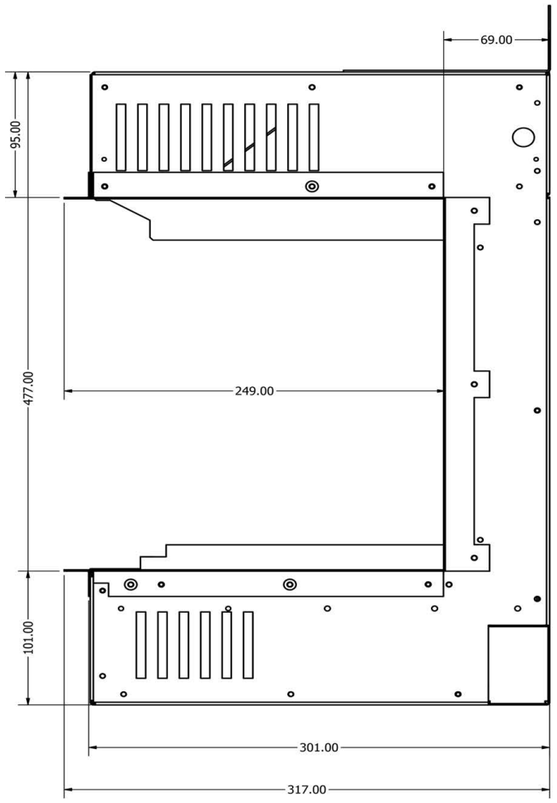
69.00
95.00
477.00
249.00
101.00
301.00
317.00

Thoren/E630

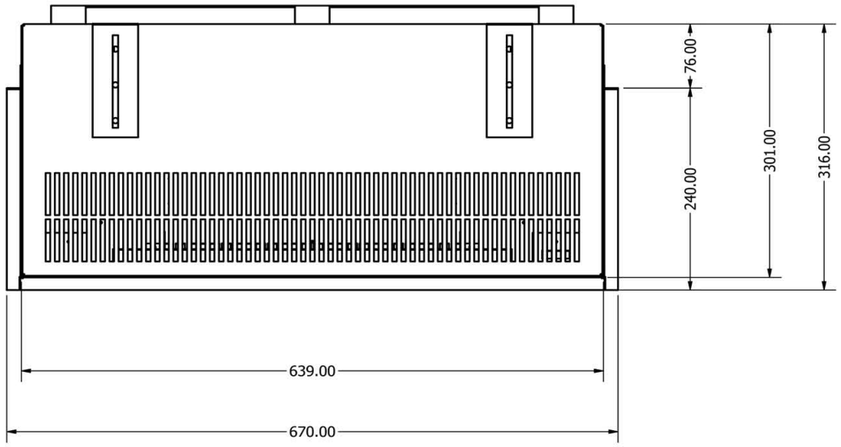
76.00
240.00
301.00
316.00
639.00
670.00

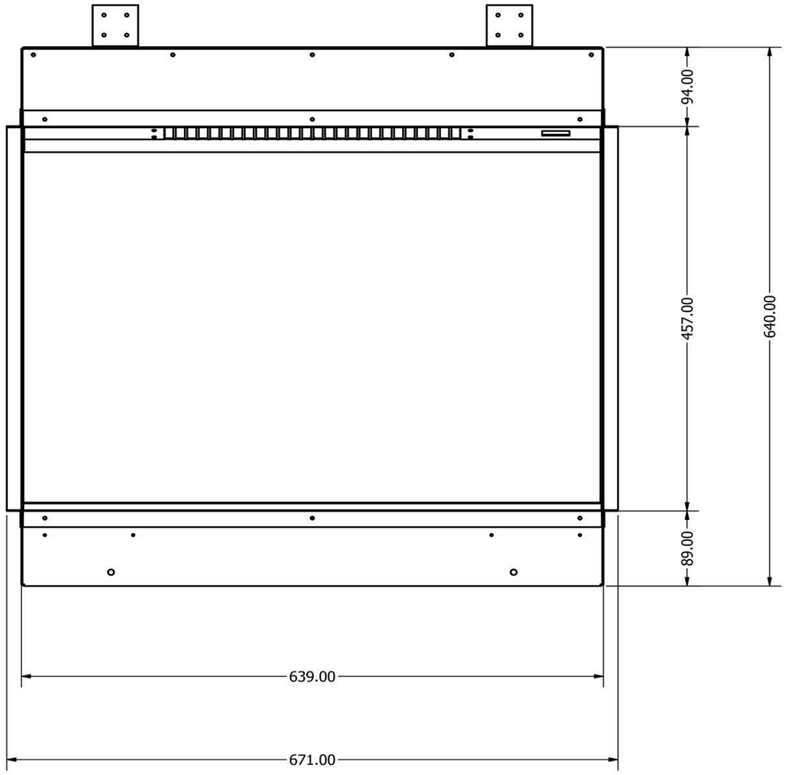
94.00
457.00
640.00
89.00
639.00
671.00

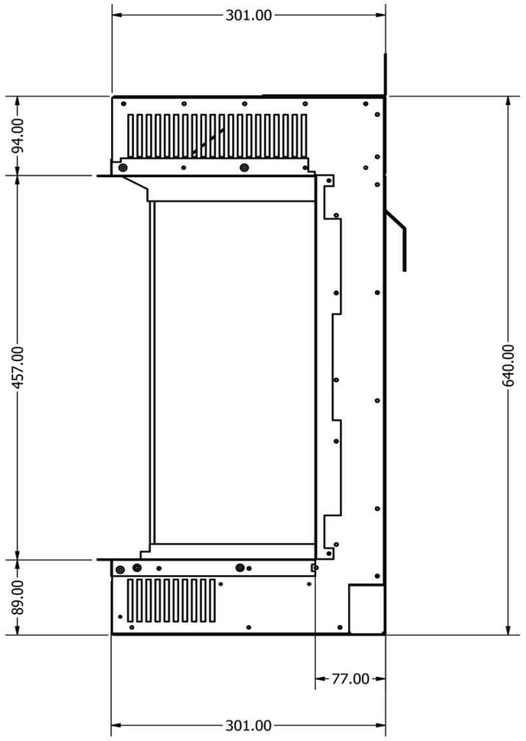
301.00
94.00
457.00
640.00
89.00
77.00
301.00

E1560

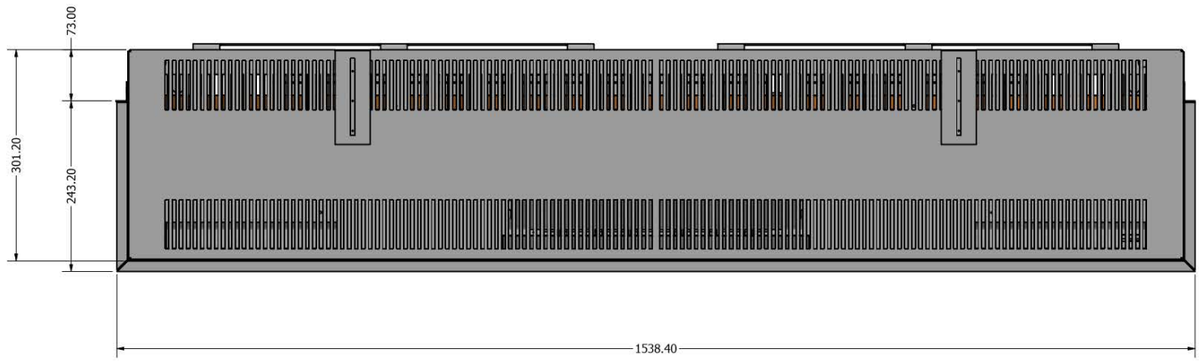
73.00
301.20
243.20
1538.40

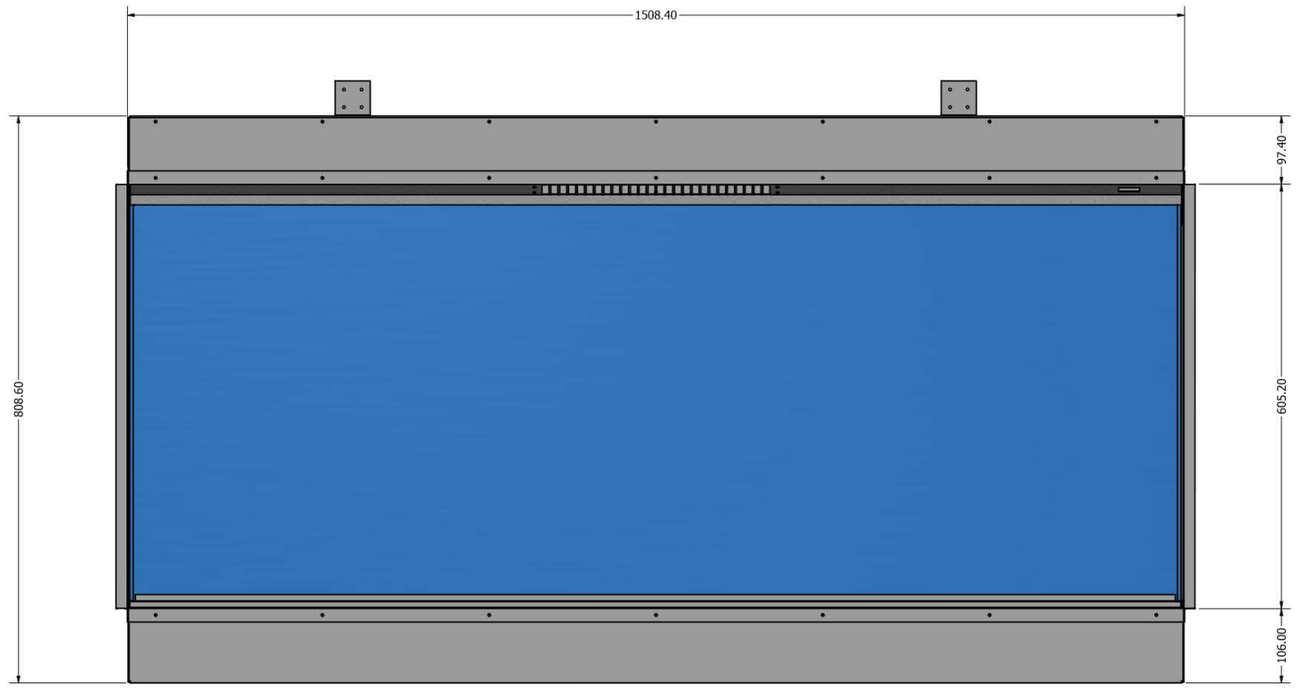
1508.40
808.60
97.40
605.20
106.00

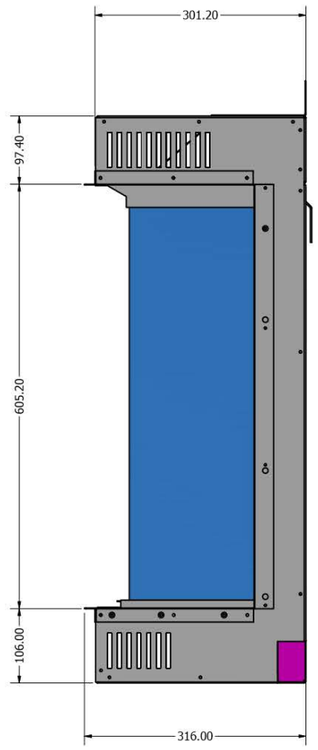
301.20
97.40
605.20
106.00
316.00

E810

73.40
301.00
316.00
808.40
838.40

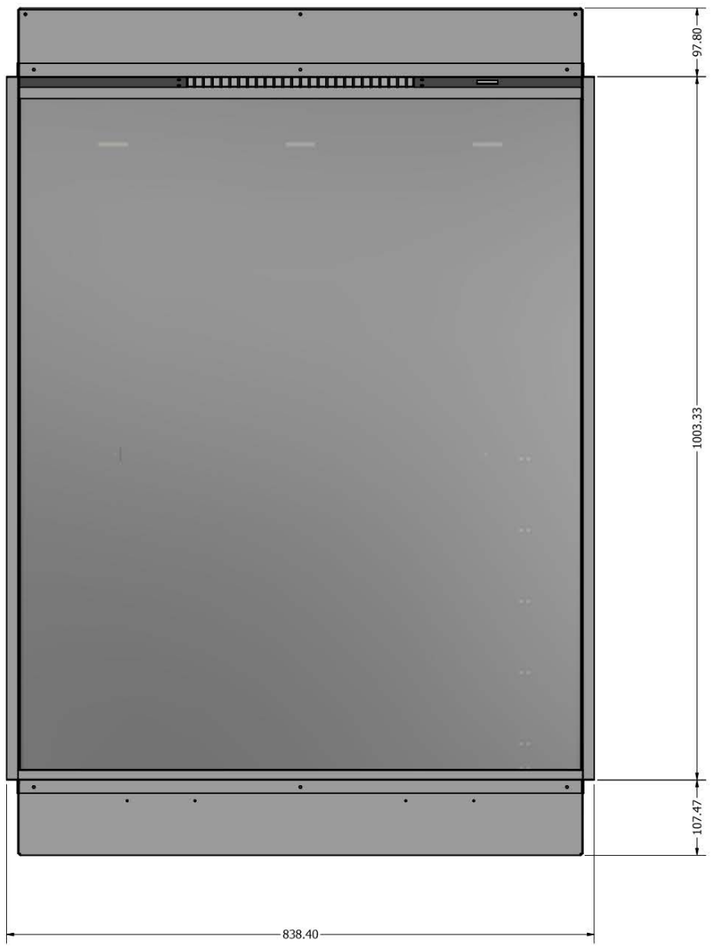
97.80
1003.33
107.47
838.40

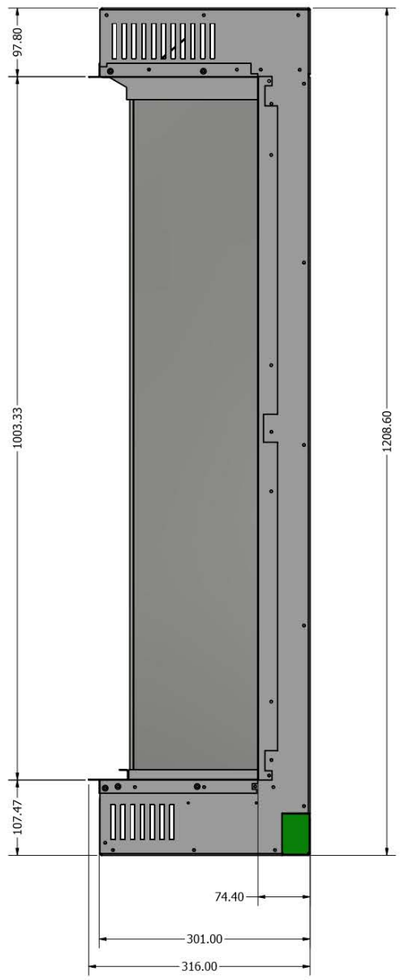
97.80
1003.33
1208.60
107.47
74.40
301.00
316.00

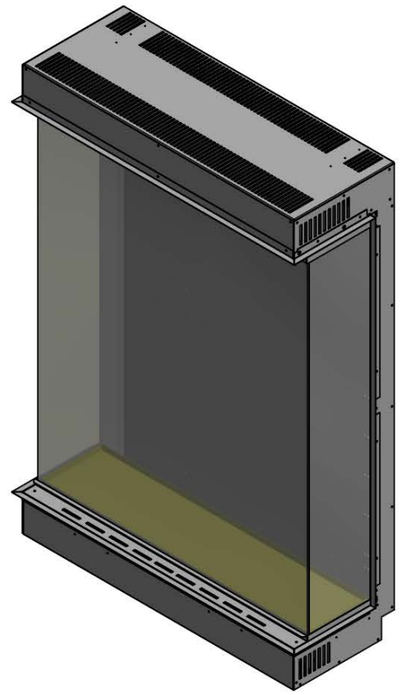

Stora DS

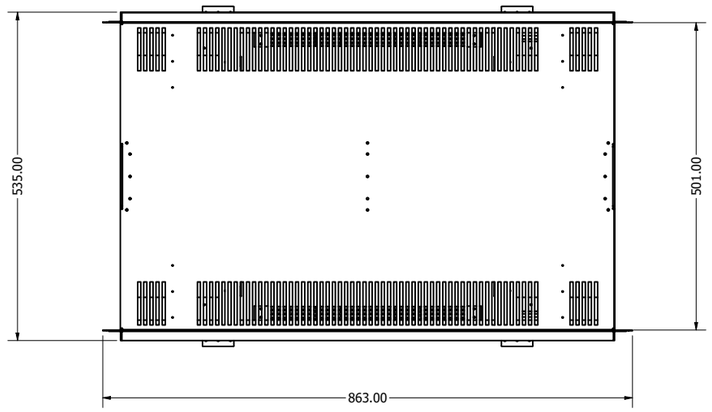

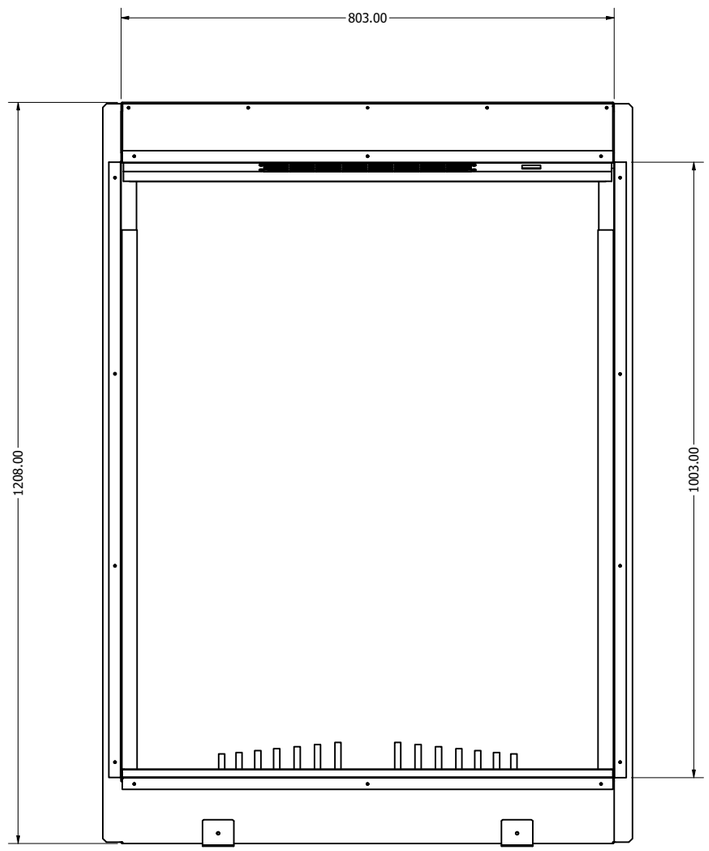

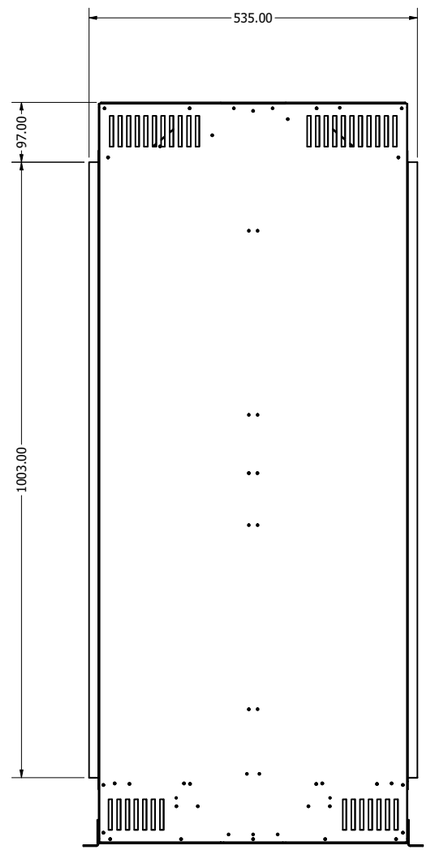

E500

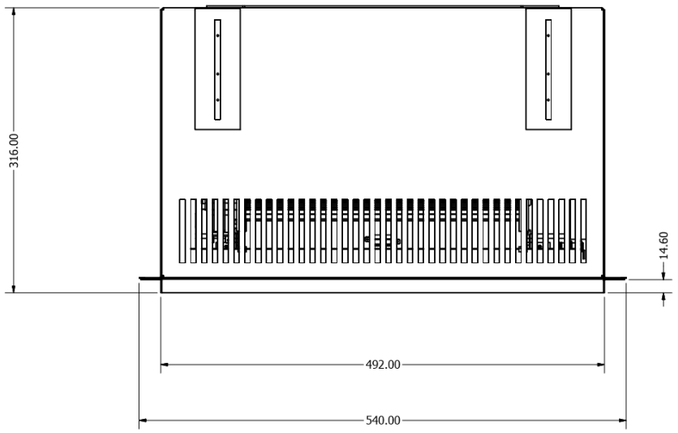
316.00
14.60
492.00
540.00

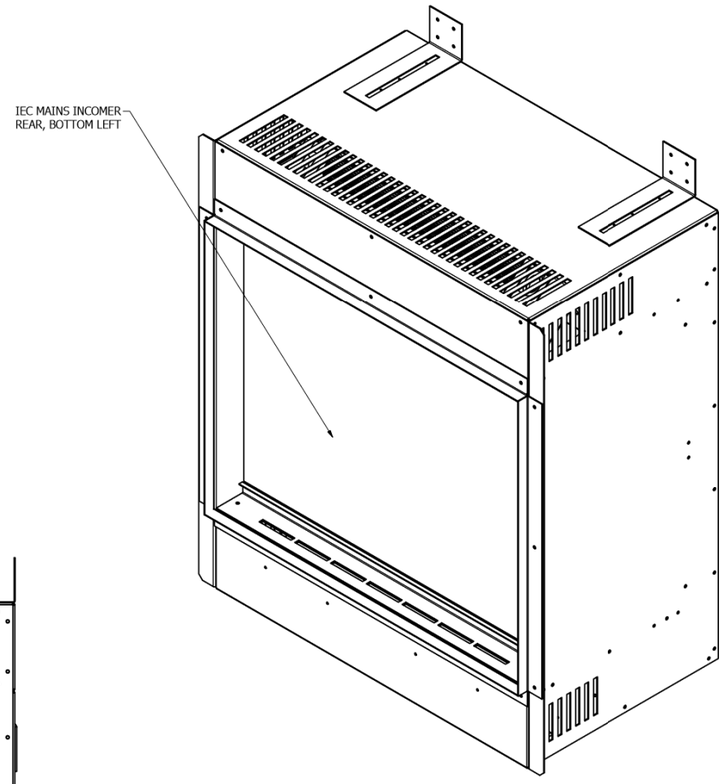
IEC MAINS INCOMER
REAR, BOTTOM LEFT

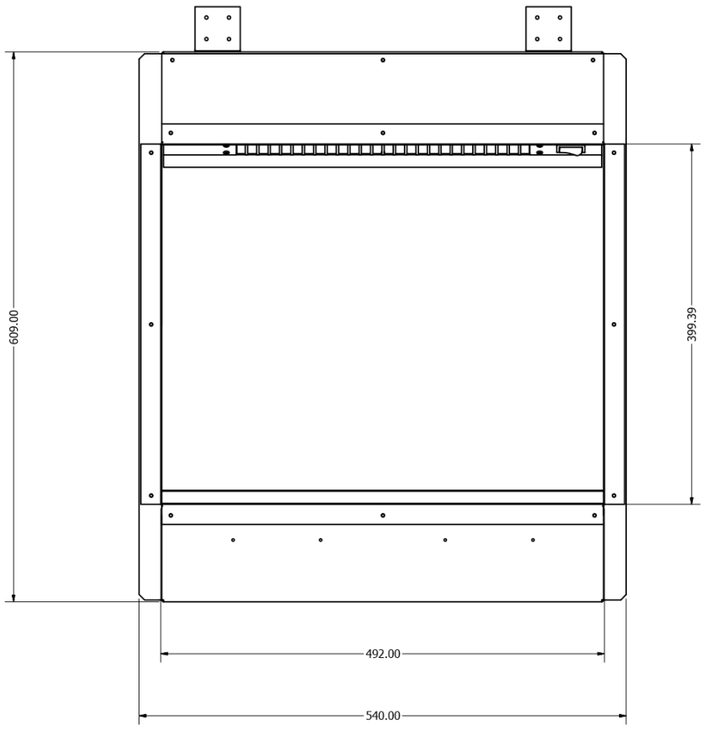
609.00
399.39
492.00
540.00

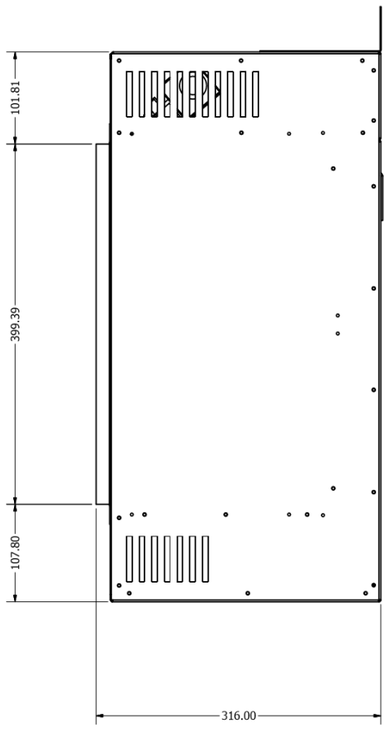
101.81
399.39
107.80
316.00

E710

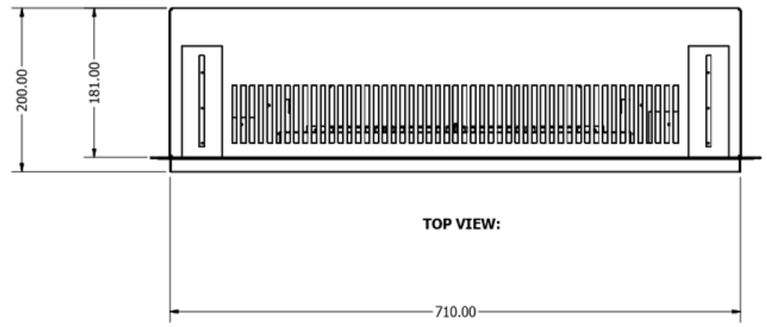
200.00
181.00
TOP VIEW:
710.00

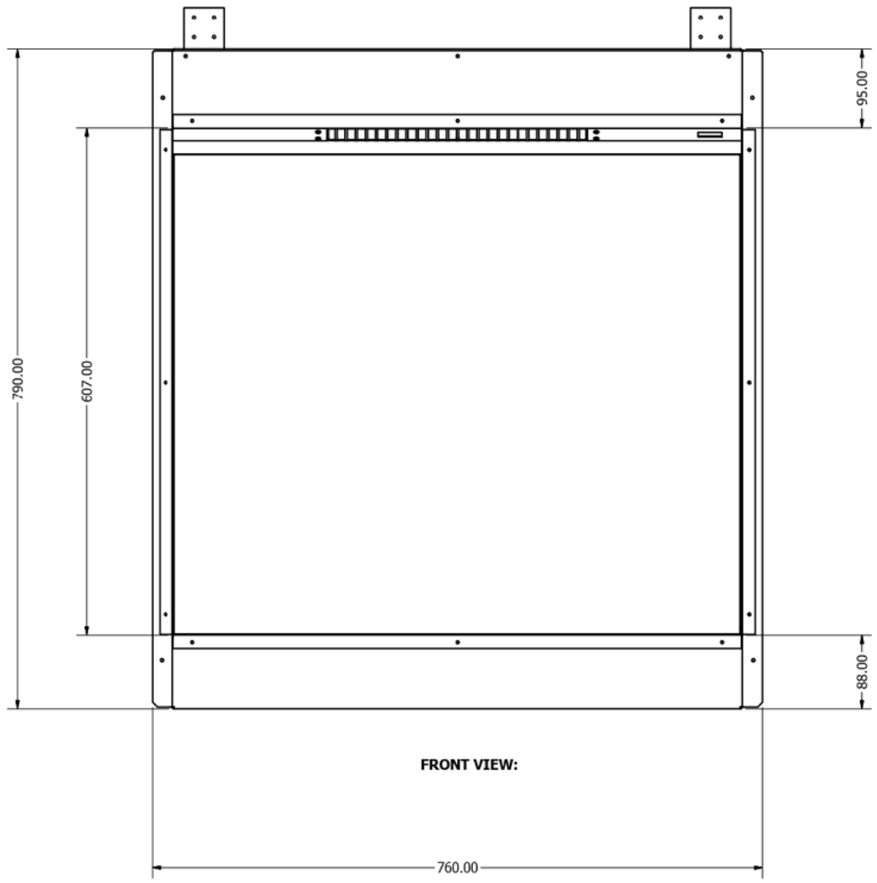
95.00
790.00
607.00
88.00
FRONT VIEW:
760.00

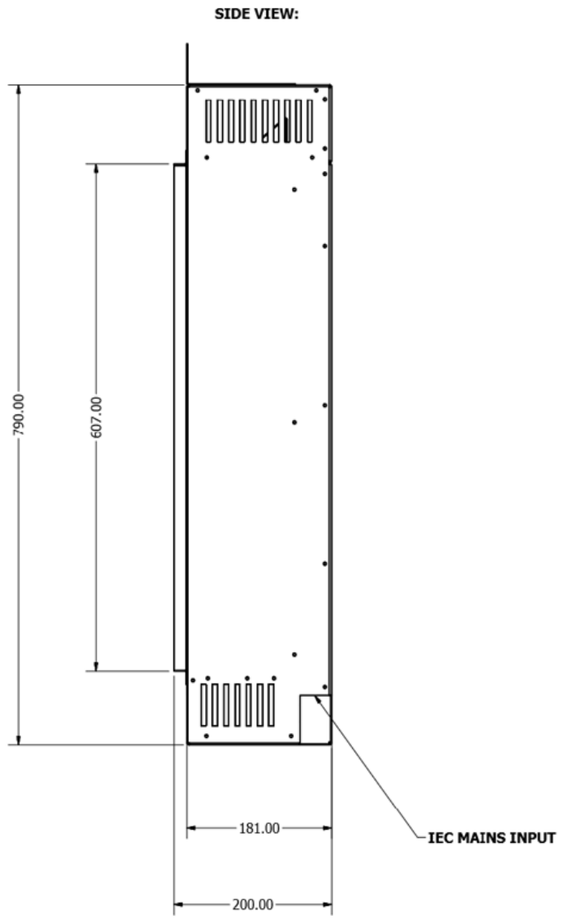
SIDE VIEW:
790.00
607.00
181.00
IEC MAINS INPUT
200.00

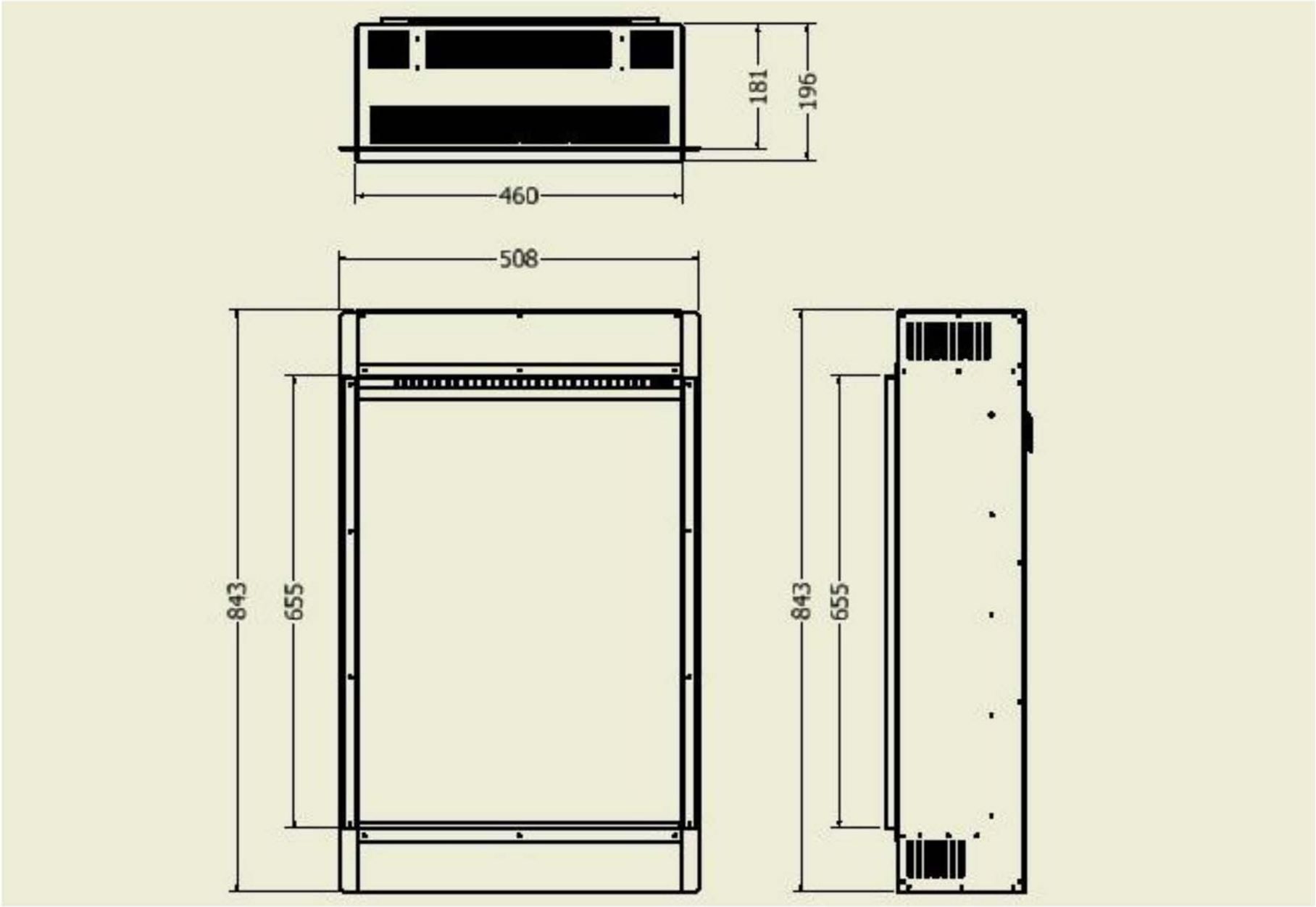
181
196
460
508
843
655
843
655