English

E-LLUSION

Sirus

INSTRUCTION MANUAL

CONTENTS

EU Directives and UKCA Standards.....3
Important Information and Health & Safety..... 4
App Instructions.....5
E-Smart Cloud App Instructions (Halo Models).....6
Pairing with Amazon Alexa.....9
Pairing with Google Home.....12
Installation..... 15
Model Dimensions..... 16
Components, Requirements and Checks.....17
Installation..... 18
Fitting Front Glass.....22
Log Layout and Troubleshooting.....23

EU DIRECTIVES

All Evonic Fires products meet the requirements of the EC Directives.
These directives have been met by compliance with the following standards:

EU 2011-65/EU 2015/863 Restriction of Hazardous Substances.

References to the relevant designated standards used:

EN 55014-1:2006 + A1:2009 + A2:2011 Electromagnetic Compatibility.

EN 55014-2:2015 Electromagnetic Compatibility.

EN 61000-3-2:2014 Electromagnetic Compatibility (EMC). Limits. Limits for Harmonic Current Emissions.

EN 61000-3-3:2013 Electromagnetic Compatibility (EMC). Limits. Limitation of Voltage Changes, Voltage Fluctuations and Flicker.

EN 60335-1:2012 + A11:2014 Household and similar electrical appliances - Safety

EN 60335-2-30:2009+A11:2012 Household and similar electrical appliances. Safety. Particular requirements for room heaters

UKCA STANDARDS

All Evonic Fires products are in conformity with the relevant UK Statutory Instruments (and their amendments).

2016 No. 1101 The Electrical Equipment (Safety) Regulations 2016

2016 No. 1091 The Electromagnetic Compatibility Regulations 2016

2012 No. 3032 The Restriction Of Use Of Certain Hazardous Substances In Electrical And Electronic Equipment Regulations 2012

IMPORTANT INFORMATION AND HEALTH & SAFETY

When using electrical appliances, basic precautions should always be followed to reduce the risk of fire, electric shock, and injury to persons, including the following:

- **Read all of the instructions carefully before using the appliance, only use this appliance as described in this manual. Any other use not recommended by the manufacturer may cause injury to persons, or damage to the appliance.**
- **Remove all packaging and dispose of it at an appropriate recycling facility.**
- **When transporting or storing the appliance and power lead, keep in a dry place, away from excessive vibration and store so as to avoid damage.**
- **This fireplace is hot when in use. To avoid burns, do not let bare skin touch hot surfaces. The trim around the heater outlet becomes hot during heater operation. DANGER: High temperatures may be generated under certain abnormal conditions.**
- **Do not install this appliance immediately in front of a fixed socket outlet.**
- **Do not install this appliance in the immediate surroundings of a bath, shower, swimming pool or any other area where the appliance could come into contact with water or humidity, e.g. a bathroom.**
- **Do not use in areas where gasoline, paint, or any flammable liquids are used or stored.**
- **This appliance is only suitable for indoor use, do not use outdoors.**
- **Do not cover the appliance, or let the air inlet/outlet to be obstructed in any way as it may overheat.**
- **Keep the power lead away from hot surfaces and the heater outlet. Do not route the power lead in front of the appliance, or under any carpets or rugs.**
- **This appliance must be firmly fixed to or recessed into, a flat internal wall.**
- **A maintenance hatch must be installed into the surrounding installation to allow future access.**
- **Always use a certified electrician should new circuits or outlets be required. And always use properly grounded, fused and polarised outlets.**
- **Where the power lead passes through any masonry wall, stone surround etc. ensure that suitable rubber bushes are fitted at any possible wear points.**
- **If the power lead is damaged do not use the appliance until it has been replaced.**
- **Do not use any external switching device, timers, or extension leads. Do not connect the appliance to a circuit that is frequently switched on and off by the utility.**
- **In the event of a malfunction, switch off the appliance, and disconnect it from the mains power supply. Have the appliance inspected by a certified electrician before reusing.**
- **Do not use the appliance if it is damaged. In the event of any damage to the appliance, please contact the retailer from whom the appliance was purchased.**
- **Any repairs must only be performed by a certified electrician.**
- **Extreme caution is necessary when any heater is used by, located near children or people of reduced mobility, and whenever the unit is left operating and unattended.**
- **Young children should be supervised to ensure that they do not play with the appliance.**
- **Disconnect from the power supply before performing any cleaning, maintenance or relocation of the unit. Do not use steam cleaners, or aerosols near the appliance.**
- **Do not burn wood or anything else in this appliance.**
- **Do not strike the glass.**
- **Do not drill or screw any new holes into the appliance.**

APP INSTRUCTIONS
E-Smart Cloud

E-SMART CLOUD APP INSTRUCTIONS

The E-Smart Cloud app is a WiFi app that can be used with both smart phones and tablet devices, and is available on both the Apple App Store and Google Play Store.

Before getting started with the app, connect the fire to the mains power, and push the rocker switch to the ON position.

To begin using the app you first need to pair your appliance to the app, we have created a video on our Youtube channel to guide you through the process of pairing your appliance to your smart phone or tablet. Scan the QR code to be taken to the video and get started.
Alternatively, search the Apple or Google store for the e-cloud app and download it to your device. Open the settings on your device and connect to the fire's wireless connection. Then open the e-smart cloud app, open the settings panel on the app's Home Page. Scroll down to the IOT Registration and fill in your details, press save. Then select your home router from the drop down box, and enter your router password, press save and connect. The app will now pair to your device, this may take a few moments. Once completed the Home Page will show on your device.

HOME PAGE

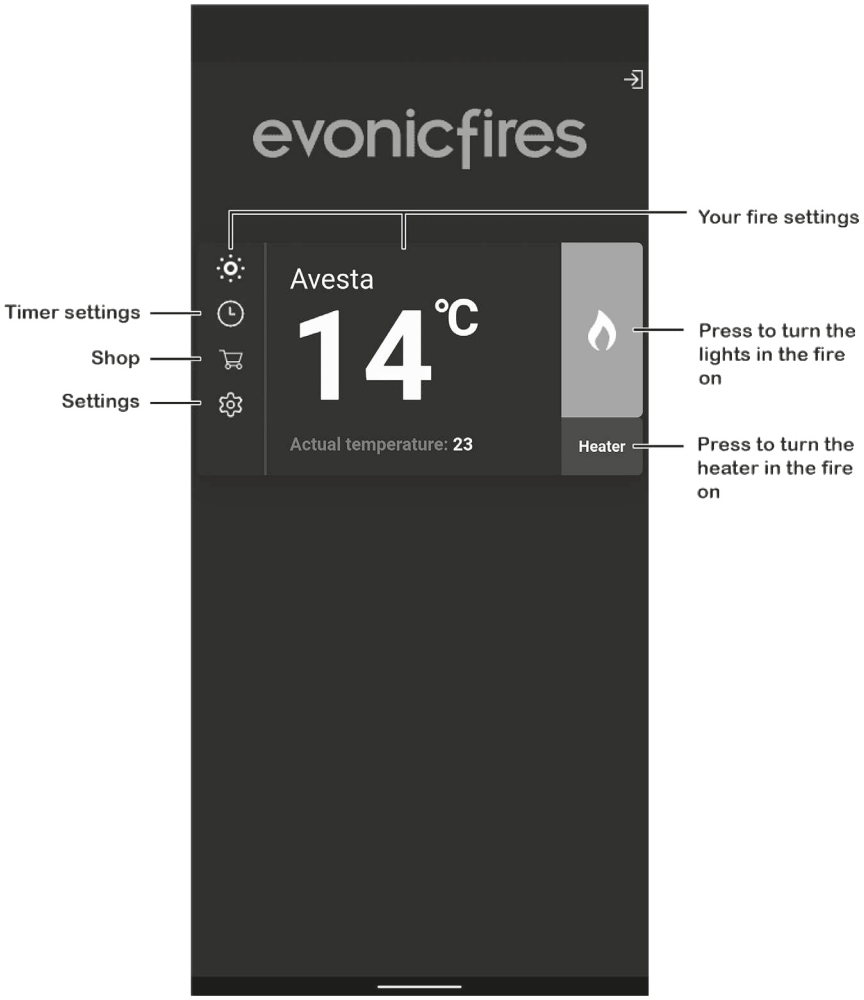

Click on your fire settings to enter the Control Overview page.

CONTROL OVERVIEW

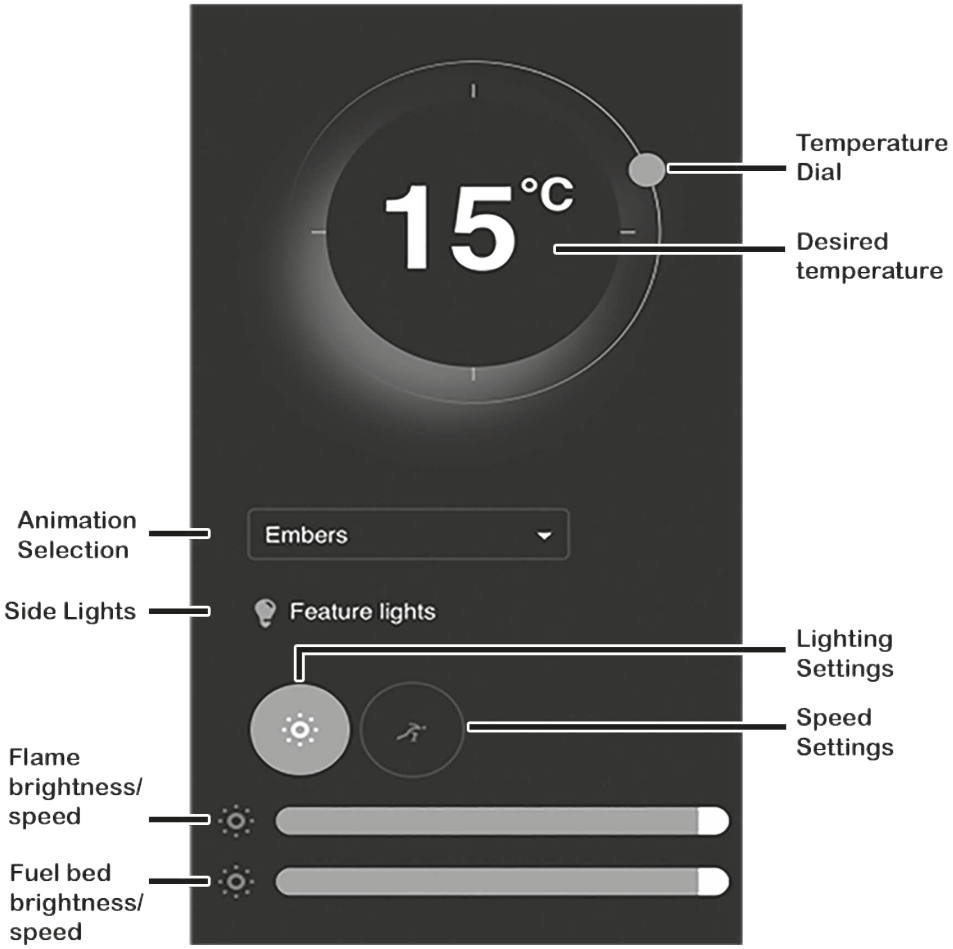

To adjust the desired temperature of your fire ensure that the heater is selected on the Home Page in the previous step. Then press, hold, and rotate the temperature dial to set the temperature.

The animation drop down allows you to choose the flame effect for your fire, more flame effects are available to download from our shop on the Home Page.

To activate your feature lights single press on the light bulb icon.

By clicking on lighting settings you can adjust the flame brightness by pressing, holding, and sliding the tab at the bottom of the screen. Slide left to lower the brightness, and right to increase the brightness. You can adjust the fuel bed brightness in the same way with the lower tab slider.

To change the speed of the LED flame effect single press the speed setting option, and slide the top dial left to slow it down, and right to increase the speed. Likewise with the fuel bed speed, slide the lower tab left to slow it down and right to increase it.

PROGRAMMING THE TIMER

1

Single press the clock icon on the Home Page to begin programming the Timer.

2

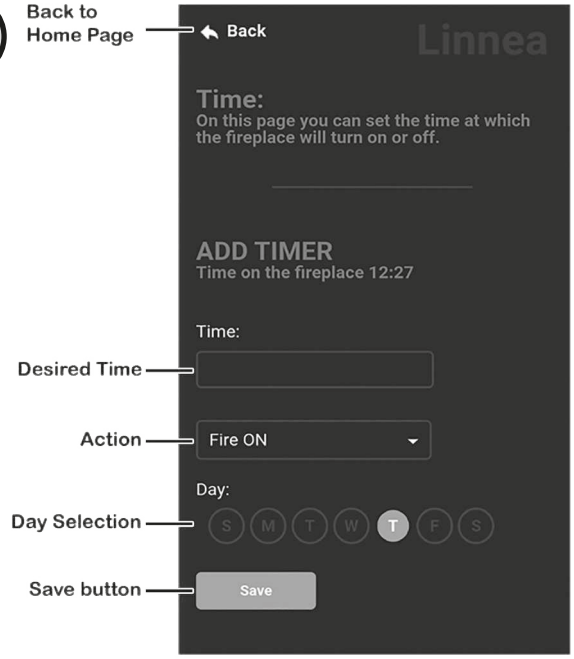

Input your desired time in the Time box, select the action (Fire On/Off/, Heater On/Off) you want. Deselect the day/s you don't want it to apply to, and press the Save button.

3

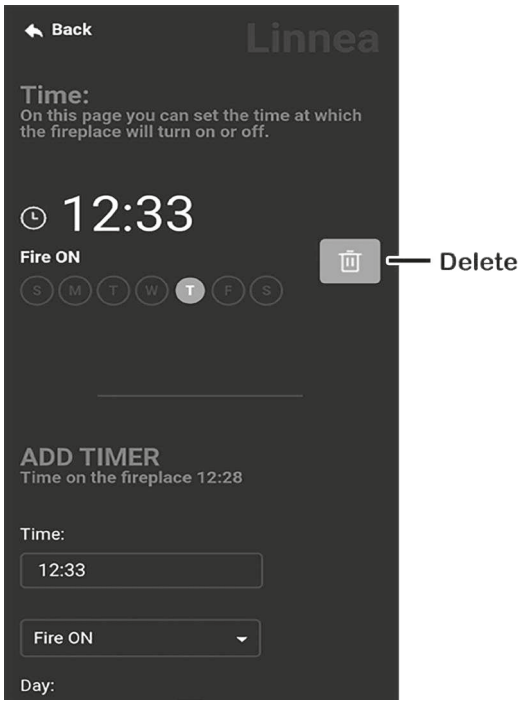

The above screen will now show your set timer. To delete the timer press the bin icon. To add an additional timer scroll down and repeat the process. Press the Back button to return to the Home Page.

LOGGING OUT

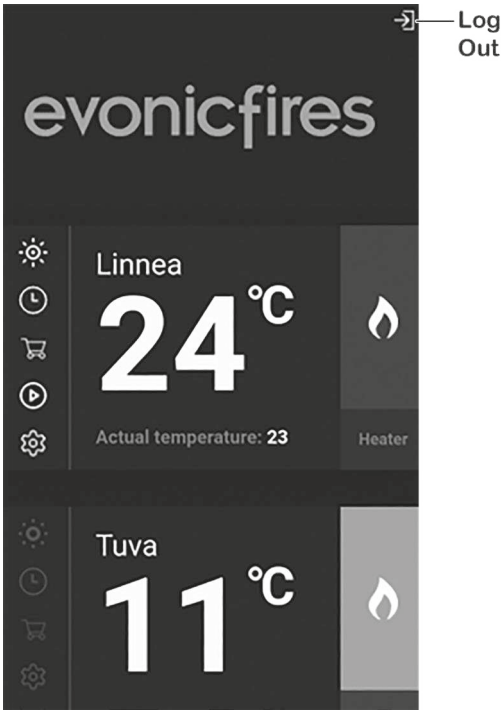

To log out of your account, single press the exit icon in the top right hand corner of the Home Page.

PAIRING WITH AMAZON ALEXA

1

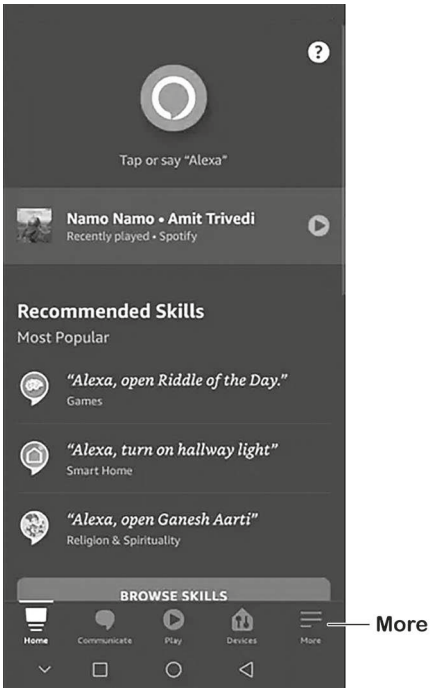

Once your fire is installed, and switched on, download and open the Amazon Alexa app. Once open single press More in the bottom right hand corner.

2

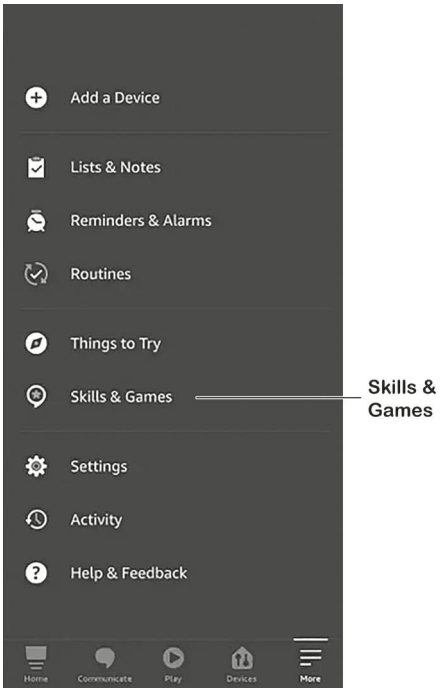

Single press Skills & Games on the pop up list.

3

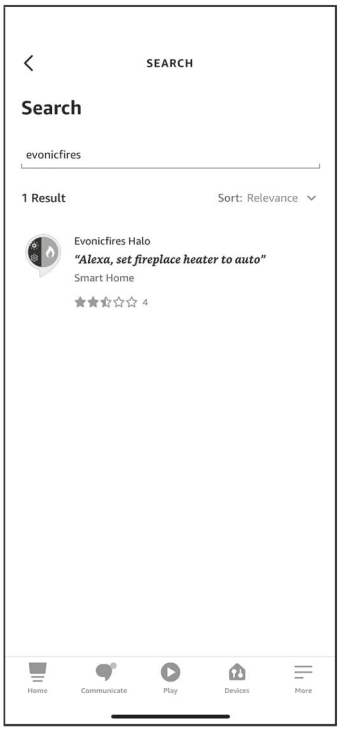

Single press Search and type in evonicfires. Select the Evonicfires Halo skill icon to open.

4

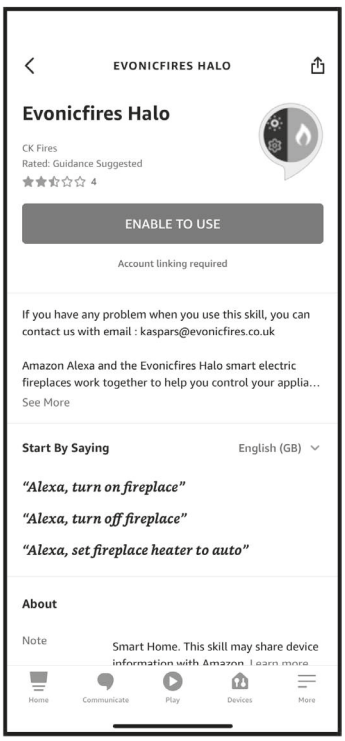

Now on the Evonicfires Halo skill page you can single press the Enable to Use button to go to the log in page.

5

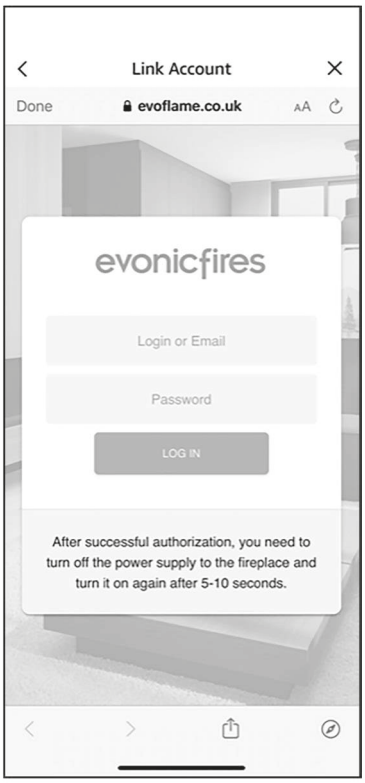

Enter the log in details that you previously entered in the app set up process, and single press Log In.

6

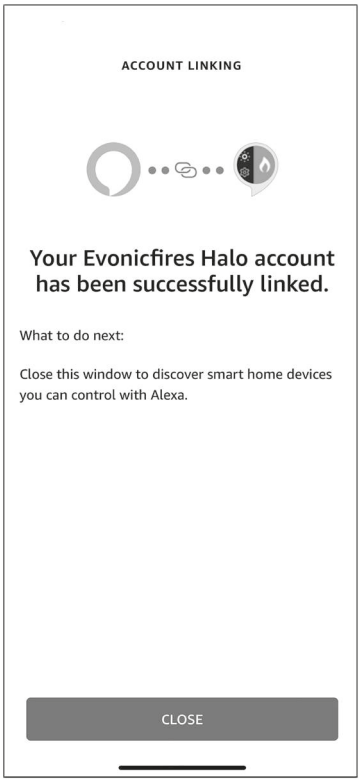

After a few moments your account will be linked, once this is done you can single press Close.

7

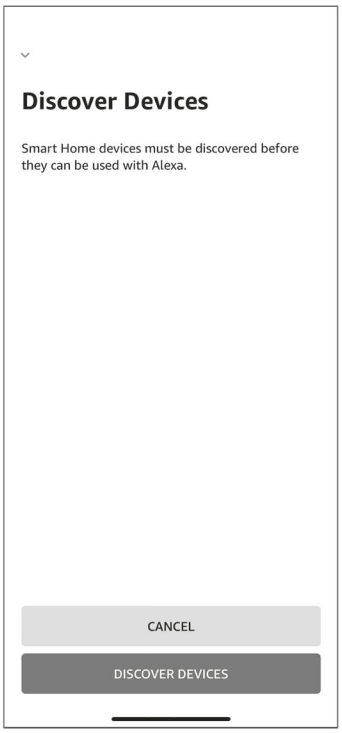

Single press Discover Devices to search for your fire.

8

Your fire will show up as two devices, allowing you to programme the heater separately to the effects. Single press the second option, and Set up Device.

ALEXA COMMANDS

When using Alexa to control your appliance settings remember to substitute the words 'the fire' for whatever you have named your appliance.

Turning the appliance On and Off.

"Alexa, turn fire on."

"Alexa, turn fire off."

Turning the heater On and Off.

"Alexa, set fire heater to auto."

"Alexa, set fire heater to off."

Changing the temperature.
Alexa can only change the temperature between 10° and 32°.

"Alexa, set temperature to 27 degrees."

"Alexa, make it warmer in there."

Increases the temperature by 3°

"Alexa, make it cooler in there."

Decreases the temperature by 3°

Changing the flame effect.

"Alexa, set animation to still."

"Alexa, set animation to breathe."

"Alexa, set animation to spectrum."

"Alexa, set animation to embers."

"Alexa, set animation to odyssey."

"Alexa, set animation to aurora."

PAIRING WITH GOOGLE HOME

1

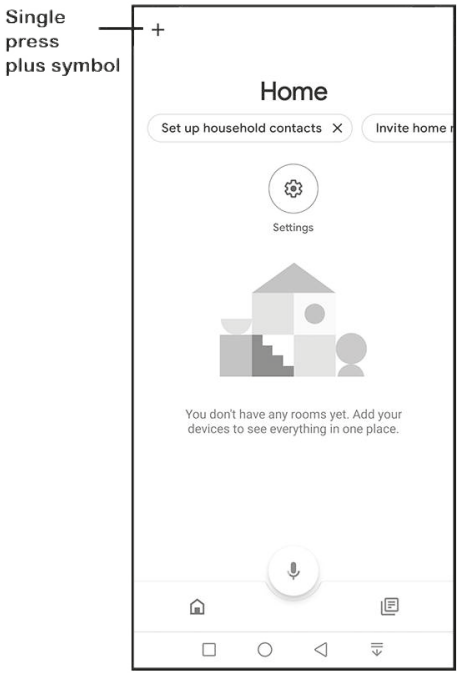

Once your fire is installed, and switched on, download and open the Google Home app. Once open single press the plus symbol in the top left hand corner.

2

Single press Set up Device on the pop up list.

3

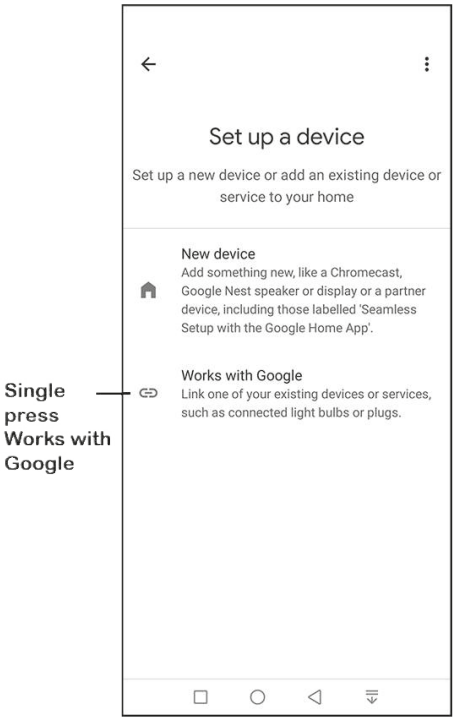

Single press Works with Google.

4

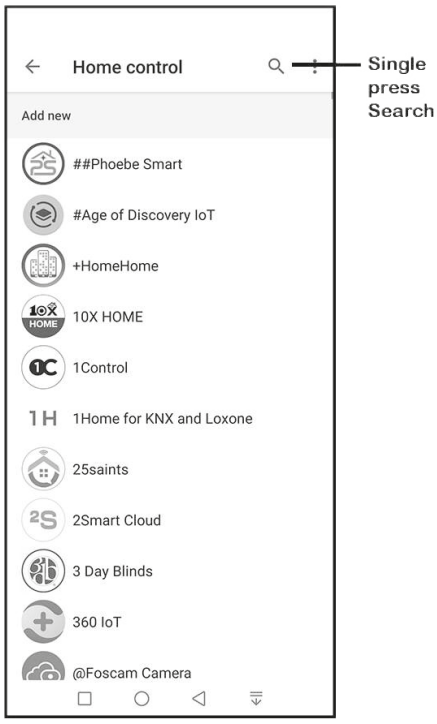

Single press the Search icon in the top right corner.

5

Type in Evonic Fires, single press search and then select the Evonic Fires E-Smart icon.

6

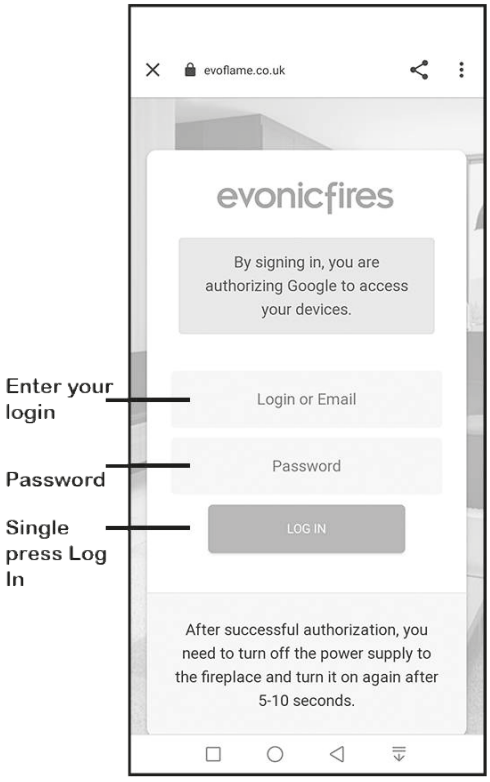

Once in the evoflame log in page, enter the log in details that you previously entered in the app set up process, and single press Log In.
Your appliance is now paired with Google Home!

GOOGLE HOME COMMANDS

When using Google Home to control your appliance settings remember to substitute the words 'the fire' for whatever you have named your appliance. Please note that the Google Home app cannot control the heater in the appliance.

Turning the appliance On and Off.

"OK Google, turn on the fire."

"OK Google, turn off the fire."

Changing the flame effect.

"OK Google, change the animation to still on the fire."

"OK Google, change the animation to breathe on the fire."

"OK Google, change the animation to spectrum on the fire."

"OK Google, change the animation to embers on the fire."

"OK Google, change the animation to odyssey on the fire."

"OK Google, change the animation to aurora on the fire."

"OK Google, change the animation to red on the fire."

"OK Google, change the animation to orange on the fire."

"OK Google, change the animation to yellow on the fire."

"OK Google, change the animation to green on the fire."

"OK Google, change the animation to blue on the fire."

"OK Google, change the animation to violet on the fire."

"OK Google, change the animation to white on the fire."

INSTALLATION
Sirus

MODEL DIMENSIONS

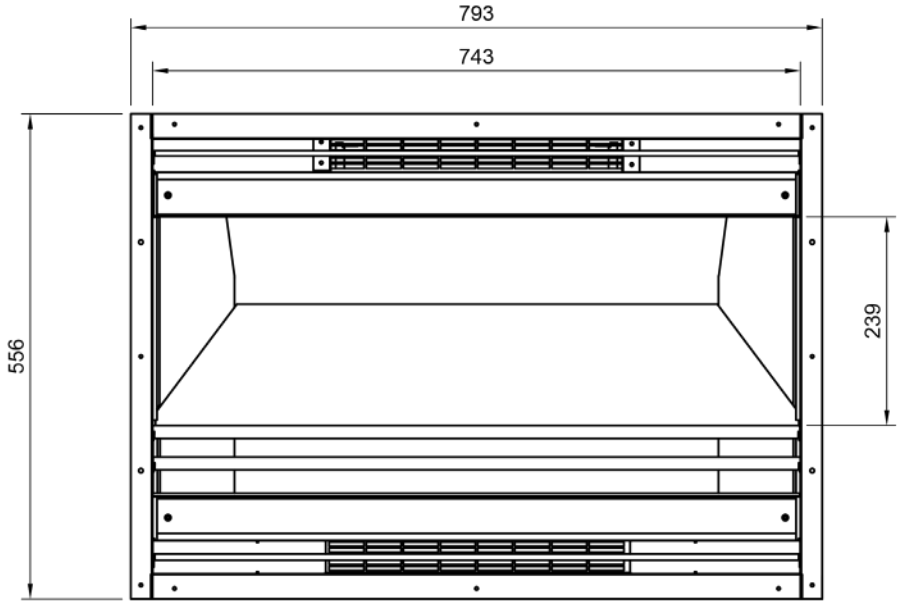

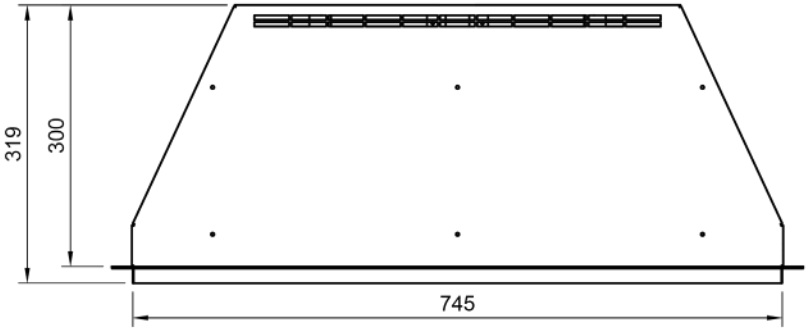

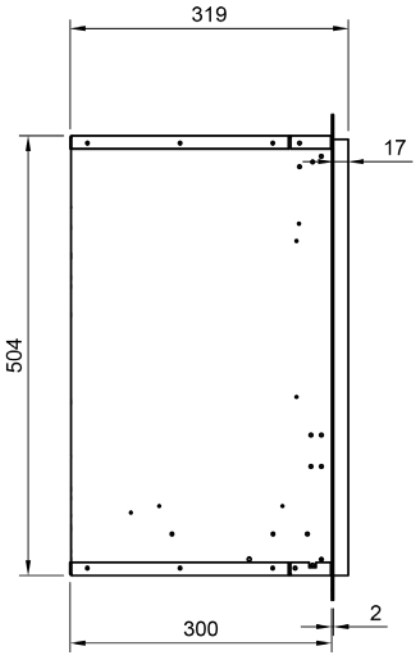

INSTALLATION

COMPONENTS FOR SIRUS

- 1 x Sirus Appliance
- 1 x Front Glass
- 1 x Suction Lifter
- 1 x E-llusion Log Set (Split Woodland or Split Silver Birch)
- 1 x Bag of Clear Glass Stones
- 1 x Bag of Amber Glass Stones
- 1 x Bag of Black Vermiculite
- 1 x Electrical Lead
- 1 x Instruction Manual

OPTIONAL

- 1 x Fascia Surround (Arctic / Soapstone / Sienna)

TOOLS REQUIRED

- Tape Measure
- Pencil
- Spirit Level
- Screwdriver
- PZ2 Screw Bit
- Screws (Supplied)

INSTALLATION REQUIREMENTS

Before installing the appliance please read and take into account the following important requirements;

- Consult a qualified professional to check the structure of the installation site.
- This appliance has been designed to be installed into either a stud and plasterboard wall, or an existing chimney breast.
- If installing into an existing chimney, make sure to adequately block off the flue.
- The appliance must never be installed immediately in front of an electrical socket.
- The appliance must not be installed anywhere that it may come into contact with water, i.e. a bathroom.

CHECKS BEFORE INSTALLATION

We recommend turning on the appliance before installation, connect the appliance to a power source using the provided electrical lead, and depress the right side of the rocker switch.

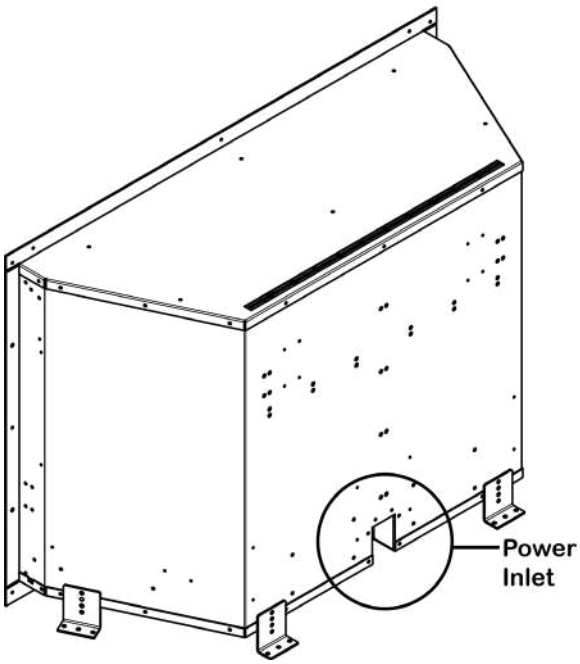

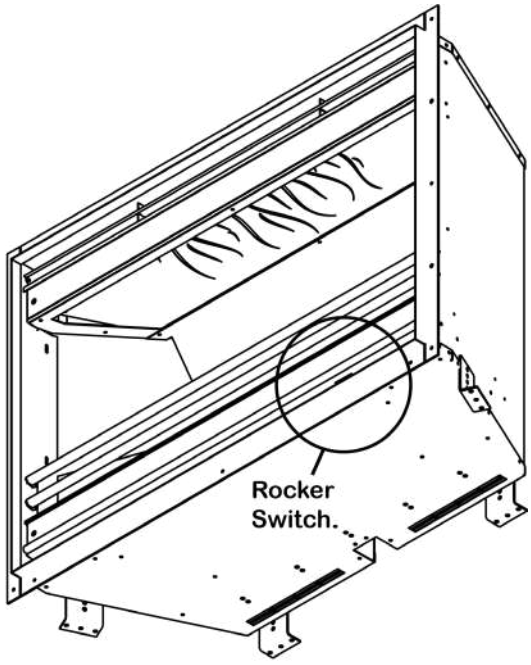

INSTALLATION STEPS

1

First, unscrew and remove the four transit brackets on the bottom corners of the fire. You won't need these for the installation. Then measure the appliance, excluding the plaster kits, to determine the size of the opening you need to create.

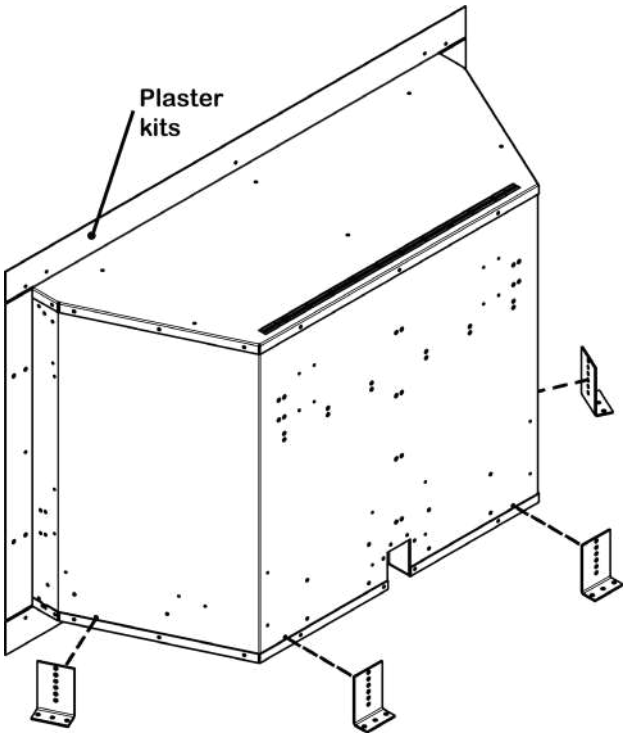

2

When constructing your studwork ensure that the appliance will have a minimum of 20mm clearance around the top and bottom mounted vents.

Ensure that the appliance isn't supporting the weight of the studwork.

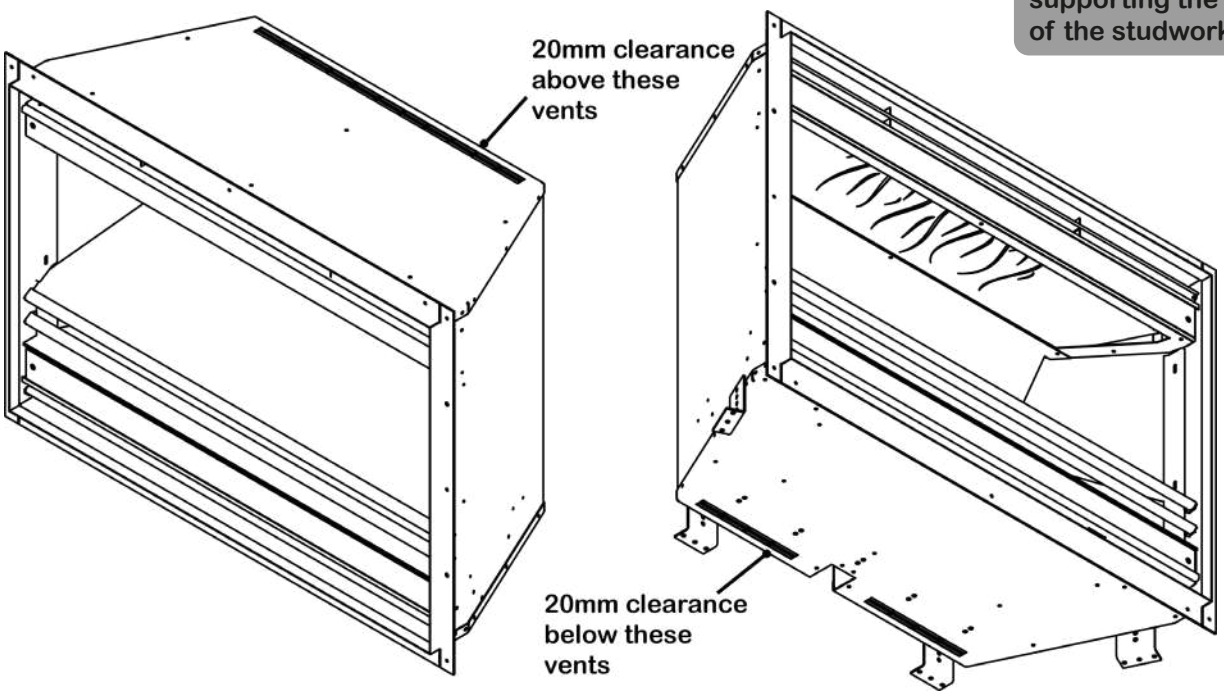

WITH FASCIA BOARD

3a Plasterboard your studwork, then slide the appliance into the prepared void. Once in place screw the appliance to the plasterboard using the two screw holes on each side.

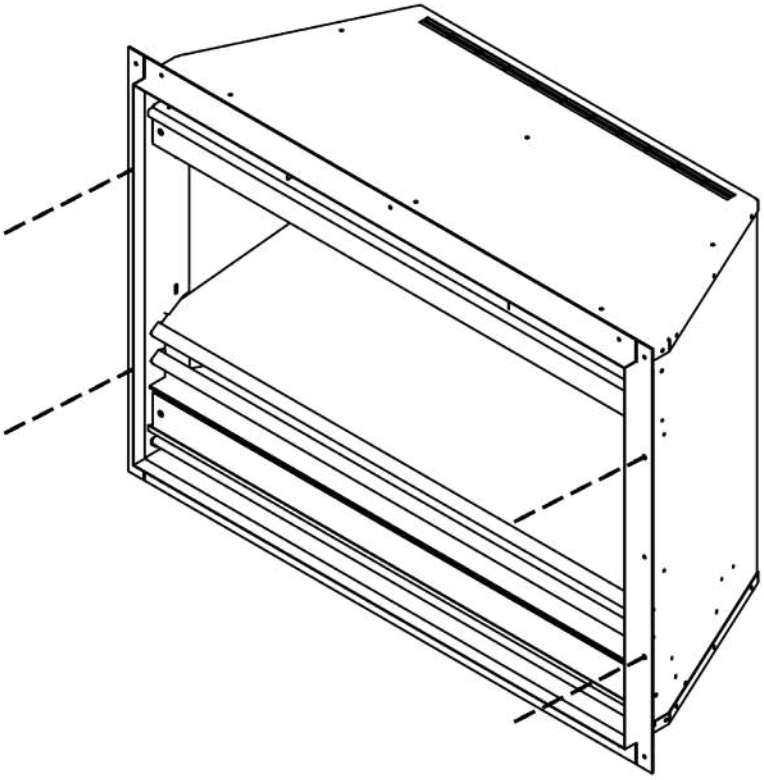

Do not use silicones or adhesives to seal in the appliance.

We recommend creating a maintenance hatch in your plasterboard for future access.

4a You can now lift and position the fascia board onto the appliance. Then screw the fascia board to the appliance by screwing the two screws supplied into the holes on the inner sides.

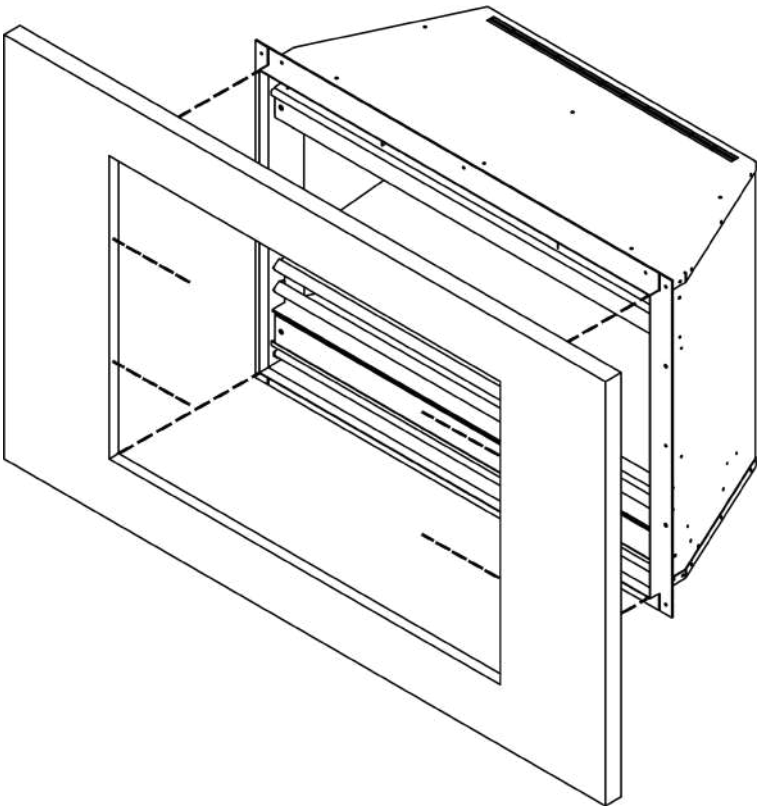

WITHOUT FASCIA BOARD

3b Slide the appliance into the prepared void then screw the appliance to the studwork using the two screw holes on each side.

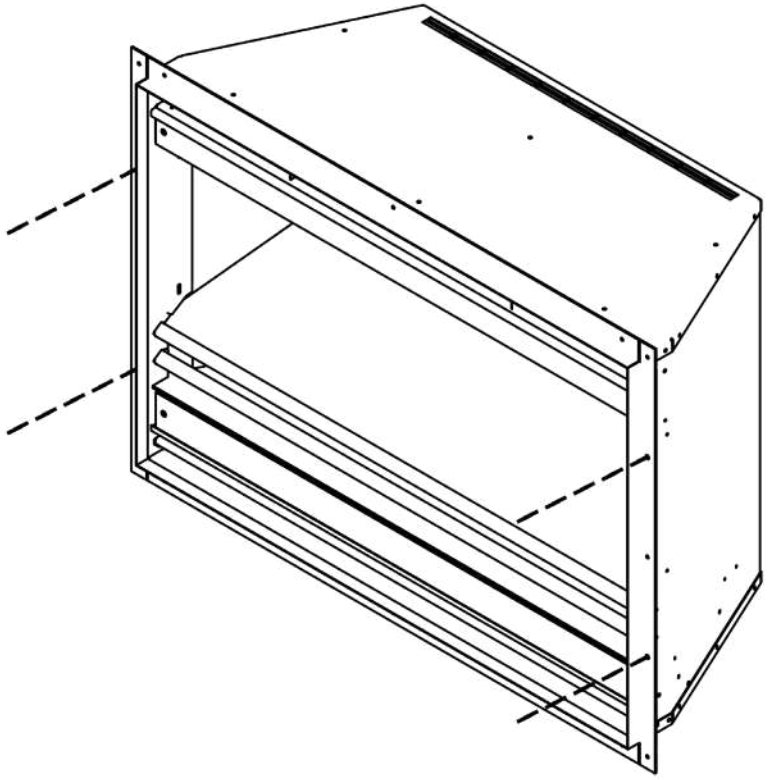

4b You can now plasterboard your studwork fitting it flush with the plaster kits on the appliance. Then screw the plasterboard to the appliance using the two screw holes on the inner sides.

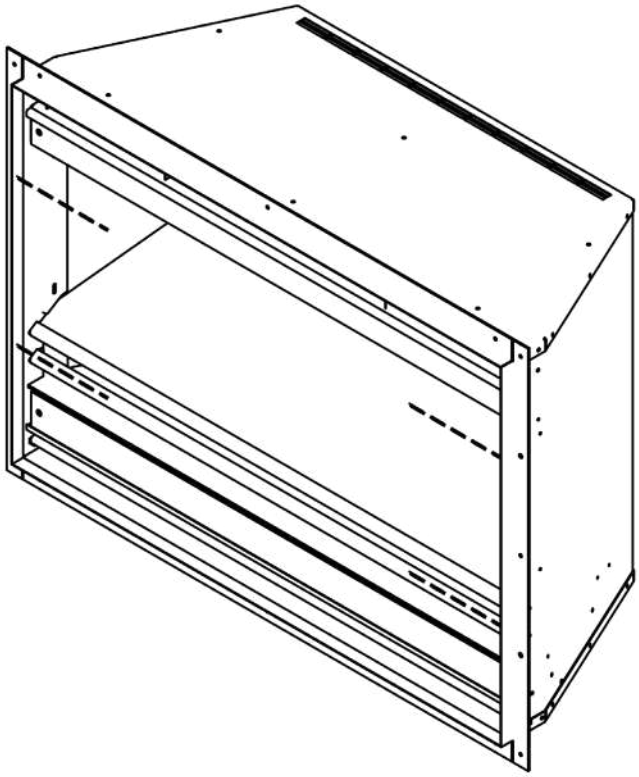

Do not use silicones, adhesives, or wet plaster to seal in the appliance.

We recommend creating a maintenance hatch in your plasterboard for future access.

REMOVING THE INTERIOR GLASS

1 Unscrew and remove the top side brackets and decorative panels on the sides of the interior. Then remove the velcro decorative panel at the back of the internal glass.

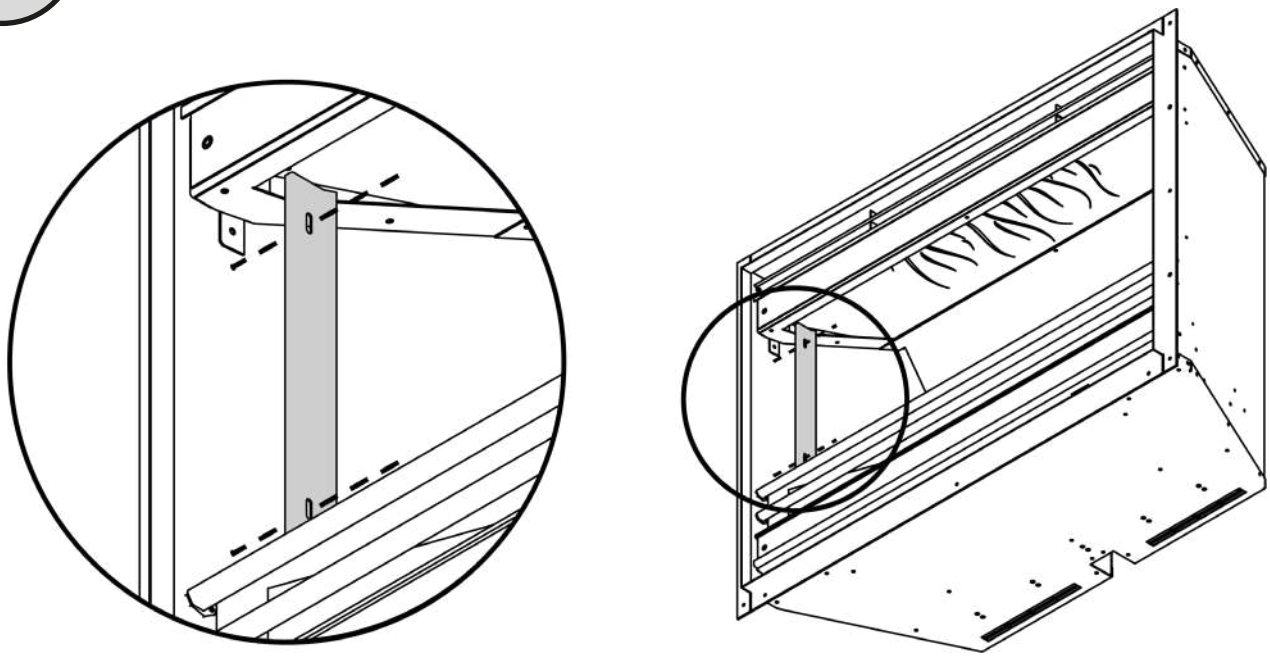

2 Lift and slide out the interior glass panel.

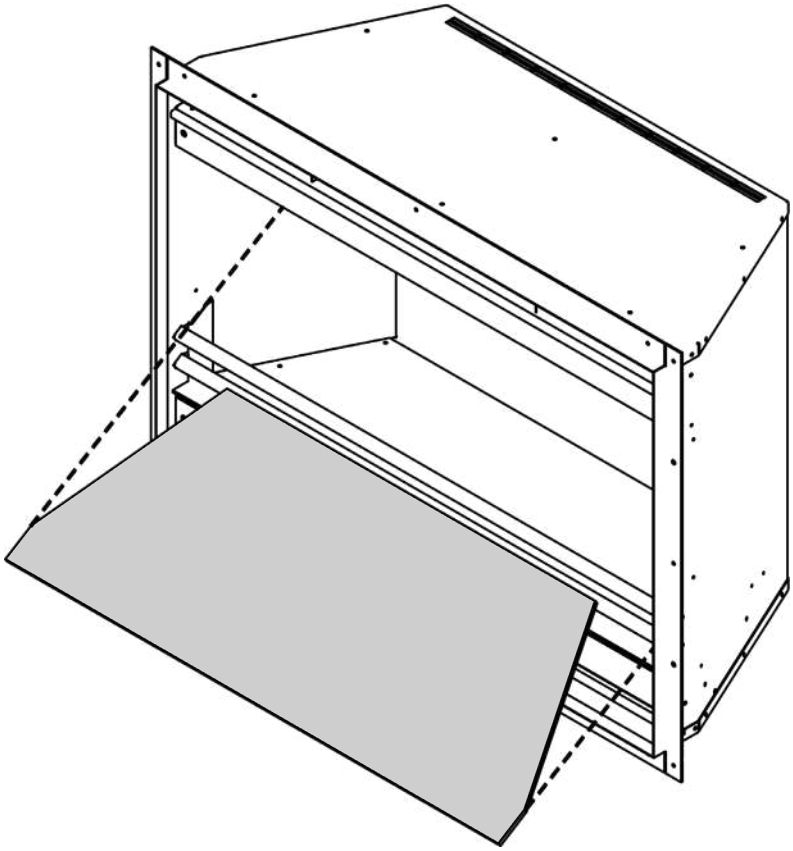

3 You can now set up your logs, and replace the interior glass by reversing the above steps.

FITTING THE FRONT GLASS

On the front of the appliance you'll see four keyholes, and on the back of the glass you'll see four screws. These four screws line up with the keyholes on the appliance and then drop into place to secure the glass to the appliance.

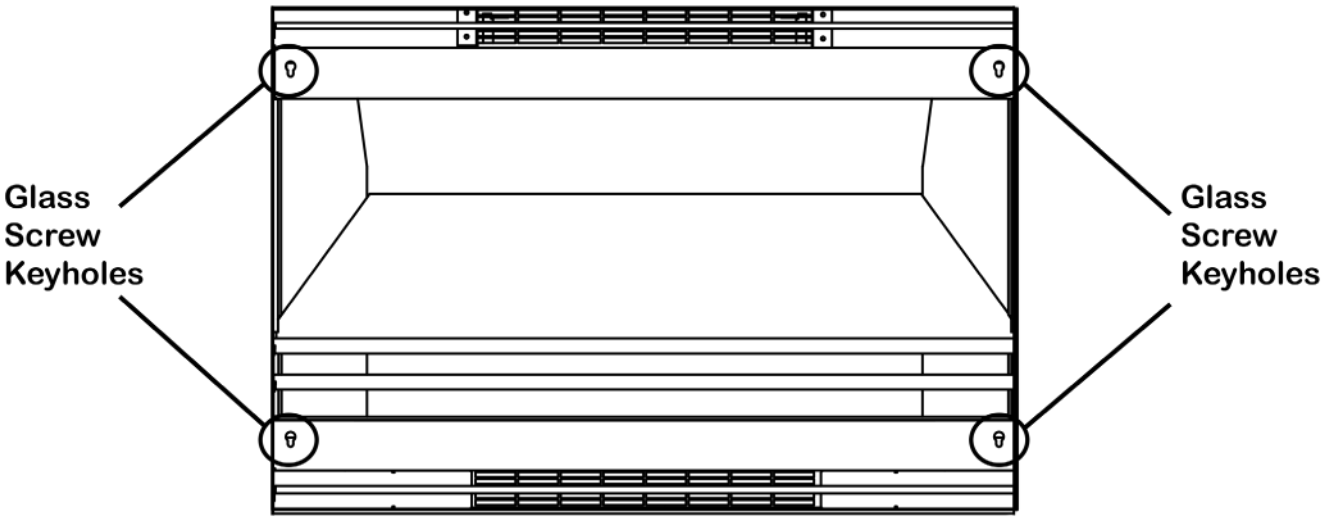

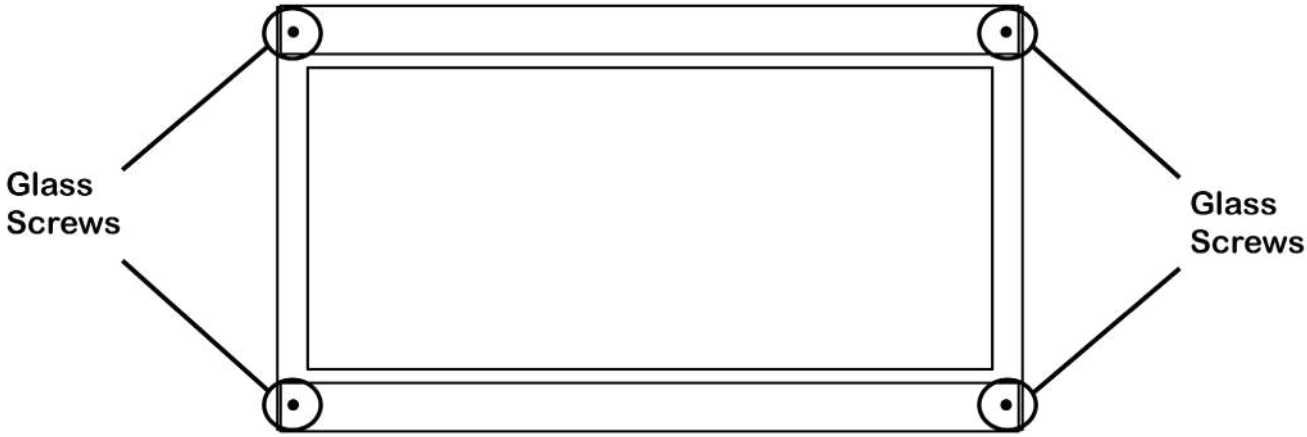

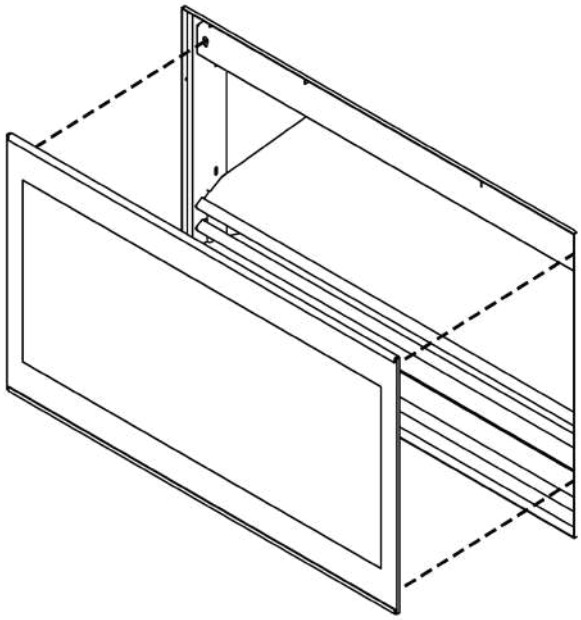

LOG LAYOUT

When you have your appliance installed you can set up your log set.

Before positioning your logs, lay out your Clear and Amber Glass Stones and Black Vermiculite onto the fuel bed. The logs can then be positioned on top of this, the following image shows an example of how you could lay them out.

TROUBLESHOOTING

If you come across any problems during the installation or use of your Sirus appliance, then please go to our website at www.evonicfires.co.uk/report-a-fault.

Alternatively, scan the below QR code to be taken directly to the report a fault page.

We will get in touch with you and assist you in fixing your problem, and if necessary send out one of our service engineers.

CK Fires Ltd / Evonic Fires

1, Evonic House, Clifford Park, Clifford Lane,
Stratford-on-Avon, CV37 8HW

Tel: +44 (0)1789 263868 Fax: +44 (0)1789 293080
Email: sales@evonicfires.co.uk

Follow us on:
Instagram | Facebook | Twitter | LinkedIn
@evonicfires