evonicfires
quality electric fires built in britain

INSTRUCTIONS MUST BE KEPT AFTER INSTALLATION IN CASE OF FUTURE MAINTENANCE

Halo Instruction Guide

Important Safety Information

Always read this manual first before attempting to install or use this fireplace. For your safety, always comply with all warnings and safety Instructions contained in this manual to prevent personal injury or property damage.

Please Note: This product is for well insulated spaces or occasional use.

English **260991-Halo**

SERIAL NUMBER LABEL

Contents

1.	Introduction	**2**
2.	Electrical Safety	**3/4**
3.	Important Instructions	**5/6**
4.	Installation Method	**7/8**
5.	Glass Removal	**9/10**
6.	Side Conversion Panels	**11/14**
7.	E-smart App Template	**15**
8.	Product Operation	**16/17**
9.	Problem Solving Chart	**18/21**
10.	Technical Specification	**22**
11.	Warranty Information	**23**

welcome to **evonicfires**

evonicfires is an award-winning brand of CK Fires Ltd, situated just outside Stratford-upon-Avon, we manufacture a range of British built electric fires and are considered as one of the most technically advanced manufacturers in the world, with optional controllers such as e-tab and a fully integrated APP available to download on both Download on the App Store or GET IT ON Google Play.

This guide is designed to aid in the installation and continued performance of this product. This product conforms with all health, safety, and environmental protection standards as indicated by a CE mark. For optimum performance this product requires a well insulated location or occasional use.

ELECTRICAL SAFETY:

When using electrical appliances, basic precautions should always be followed to reduce the risk of fire, electric shock, and injury to persons, including the following:

① Read all instructions before using this electric fireplace.

② This fireplace is hot when in use. To avoid burns, do not let bare skin touch hot surfaces. The trim around the heater outlet becomes hot during heater operation. DANGER: High temperatures may be generated under certain abnormal conditions. Do not partially or fully cover or obstruct the front of this heater.

③ Extreme caution is necessary when any heater is used by or near children or people of reduced mobility and whenever the unit is left operating and unattended.

④ Young children should be supervised to ensure that they do not play with the appliance.

⑤ The appliance is not intended for use by young children or infirmed persons without supervision.

⑥ In the event of a malfunction, disconnect power at the service panel and have the unit inspected by a reputable electrician before reusing.

⑦ If the supply cord is damaged, it must be replaced by the manufacturer, or its service agent, or a qualified person in order to avoid a hazard.

⑧ Do not use outdoors.

⑨ Never locate fireplace where it may fall into a bathtub or other water container.

⑩ To disconnect the fireplace, turn the controls off, and turn off power to heater circuit at main disconnect panel.

⑪ Do not run the cord under carpeting. Do not cover cord with throw rugs, runners, or the like. Arrange cord away from traffic area and where it will not be tripped over.

⑫ Do not locate the heater immediately below a fixed socket-outlet.

⑬ Do not insert or allow foreign objects to enter any ventilation or exhaust opening as this may cause an electric shock or fire, or damage to the heater.

⑭ To prevent a possible fire, do not block air intakes or exhaust in any manner.

⑮ All electrical heaters have hot and arcing or sparking parts inside. Do not use in areas where gasoline, paint, or flammable liquids are used or stored.

⑯ Use this fireplace only as described in this manual. Any other use not recommended by the manufacturer may cause fire, electric shock or injury to persons.

⑰ Do not change the plug in any way. Always plug heaters directly into a wall outlet/receptacle. Never use with an extension cord or relocatable power tap (outlet/power strip).

⑱ Do not burn wood or other materials in the electric fireplace.

⑲ Do not strike the fireplace glass.

⑳ Always use a certified electrician should new circuits or outlets be required.

㉑ Always use properly grounded, fused and polarized outlets.

㉒ Disconnect all power supply before performing any cleaning, maintenance or relocation of the unit.

㉓ When transporting or storing the unit and cord, keep in a dry place, free from excessive vibration and store so as to avoid damage.

NOTE: Changes or modifications not expressly approved by the party responsible for compliance could void user's authority to operate the equipment.

IMPORTANT INSTRUCTIONS:

Please read these instructions before installation or use and keep this booklet handy for future reference.

All Evonic fires products meet the requirements of the EC Directives.

These directives have been met by compliance with the following standards:

EU 2011-65/EU 2015/863 - Restriction of Hazardous Substances

EN 55014-1:2006 + A2:2011 Electromagnetic compatibility.

EN 55014-2:2015 Electromagnetic compatibility.

EN 61000-3-2:2014 Electromagnetic compatibility (EMC). Limits. Limits for harmonic current emissions

EN 61000-3-3:2013 Electromagnetic compatibility (EMC). Limits. Limitation of voltage changes, voltage fluctuations and flicker

EN 60335-1:2012 + A1:2014

EN 60335-2-30:2009+A11:2012

Safety:

This appliance can be used by children aged from 8 years and above and persons with reduced physical, sensory or mental capabilities or lack of experience and knowledge if they have been given supervision or instruction concerning use of the appliance in a safe way and understand the hazards involved. Children shall not play with the appliance. Cleaning and user maintenance shall not be made by children without supervision

The instructions shall state that the heater must not be located immediately below a socket outlet.

WARNING: in order to avoid overheating, do not cover the heater.

Children of less than 3 years should be kept away unless continuously supervised

Children aged from 3 years and less than 8 years shall only switch on/off the appliance provided that it has been placed or installed in its intended normal operating position and they have been given supervision or instruction concerning use of the appliance in a safe way and understand the hazards involved. Children aged from 3 years and less than 8 years shall not plug in, regulate and clean the appliance or perform user maintenance.

CAUTION: Some parts of this product can become very hot and cause burns. Particular attention has to be given where children and vulnerable people are present

CAUTION: In order to avoid a hazard due to inadvertent resetting of the thermal cut-out, this appliance must not be supplied through an external switching device, such as a timer, or connected to a circuit that is regularly switched on and off by the utility

CAUTION: The LED light system shall be replaced by electrically competent personnel only (LP – These cannot be user replaceable since they will allow access to live parts)

General Warnings:

Never leave children unsupervised with an unguarded heater.

Never obstruct or cover the heater outlet.

Never install or use this product where it may come in contact with water i.e. a bathroom or wet room.

Never use aerosols or steam cleaners near this product.

Never route the electric cable near the heater outlet.

Never route the electric cable under carpets or floor coverings.

Never install this product close to curtains or combustible materials.

Never Use the heater to dry clothes or other objects.

Never remove the fireplace surrounding without isolating the electric supply.

Important electrical safety:

This appliance must never be installed above or in front of a fixed electric socket.

The electrical socket must be easily accessible to isolate the supply during maintenance and cleaning.

This appliance is supplied with a two meter power lead, which has a 13Amp moulded three pin plug to connect to a standard 230/240V plug socket.

This appliance must always be earthed. If in any doubt consult a suitably competent person.

Replacement plug: (Please note that it will invalidate your warranty if the moulded plug is removed and connected to a fused spur by an unqualified person).

This appliance must only be connected to a 230/240 Volts AC 50Hz supply. Before connecting the fire, check that the supply voltage is the same as stated on the fire.

This appliance must only be used on a AC supply, fuse rating 13Amp.

The wires in the mains lead are coloured in accordance with a standard UK supply, these being:

GREEN/YELLOW – EARTH

BLUE – NEUTRAL

BROWN – LIVE

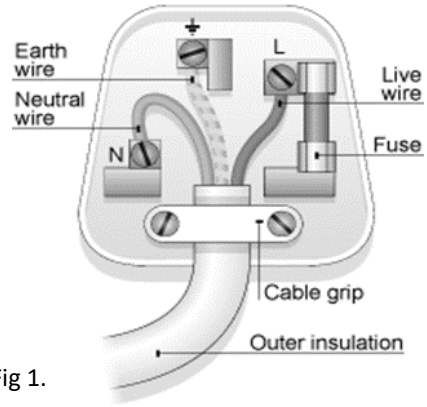

Fig 1.

As the colours of the mains lead of this appliance may not match the coloured markings used to identify the terminals in a plug, please observe the following **(Fig:1)**.

- The green and yellow wire must be connected to the terminal in the plug which is marked with the letter **E** or Earth symbol.
- The blue wire must be connected to the terminal in the plug which is marked with the letter **N**.
- The brown wire must be connected to the terminal in the plug marked with the letter **L**.
- Replace fuses only with fuses of the correct size and rating.

Servicing:

Only a competent person should service this appliance.

This appliance **must** be serviced every 12 months.

Warning: Before carrying out any repairs or servicing, ensure that the power supply cord is removed from the mains supply.

INSTALLATION METHOD:

PLEASE NOTE: It is crucial to ensure that the product has a minimum internal clearance directly above and below the product of 100 mm, this is to ensure that the product can circulate the required airflow for the heater unit.

Any faults as a result of ignoring the installation guidelines will invalidate the warranty.

This product has been designed to be installed into a plaster board, or existing masonry chimney breast.

Please note that any GF2 models from the Halo range are not suitable to be installed into a existing chimney breast.

Please seek advice from a professional, with reference to the structural integrity of the installation site.

if the products is to be installed into a open chimney or flue, it is important that the chimney/flue is blocked off to prevent any up/down draughts and falling debris which could restrict and alter the airflow to the product.

It is also important to ensure that the product has a minimum internal clearance directly above and below the product of 100mm, this is to ensure that the product can circulate the required airflow for the heater unit.

The product should never be sealed into a opening with the use of silicones or adhesives as this can also alter the airflow and hinder any further servicing of the product.

Installing Product:

Each Halo product is supplied complete with one or more wall mounting brackets. (Dependent on Model)

Establish the desired finished height from floor level to the bottom of the plaster kit of the product.

Fix the wall bracket to the wall ensuring to use the correct hardware fixings given the wall construction, Plaster board or Solid Wall.

Lift and hook the product onto the wall bracket and secure using the wall brace brackets.

Once the product is secured to the wall and connected to the power supply, the false construction such as plaster board wall or chimney breast can be formed around it.

It is important to allow for the finished face board when setting the depth of the frame construction.

It is essential to include header/Lintel at the required height to ensure the appliance does not support the weight of the finished wall.

Prepare the Cut-Out in the Plaster-board or Finishing Board, and install ensuring that the plaster kit edges are fitting to the inside of the Cut-out of the board.

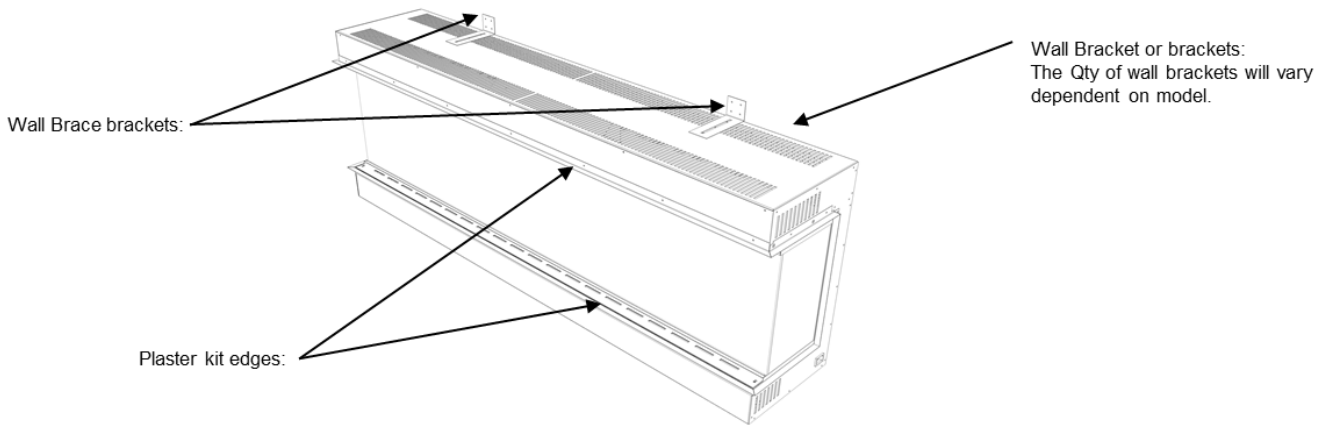

Lindstrom Installation Method:

1. In order to successfully install this appliance, you must first make sure the plaster kit is properly assembled onto the fire . This is to ensure the main body of the fire can rest suitably onto a ledge and hold the weight of the fire.

Fig 1 shows the location of both the side plaster kits and the front plaster kit.

Fig 1.

Fig 2 shows the fire fitted into an E-mod assembly. Identified are the plaster kit sides, and how they are used to support the body of the fire in place.

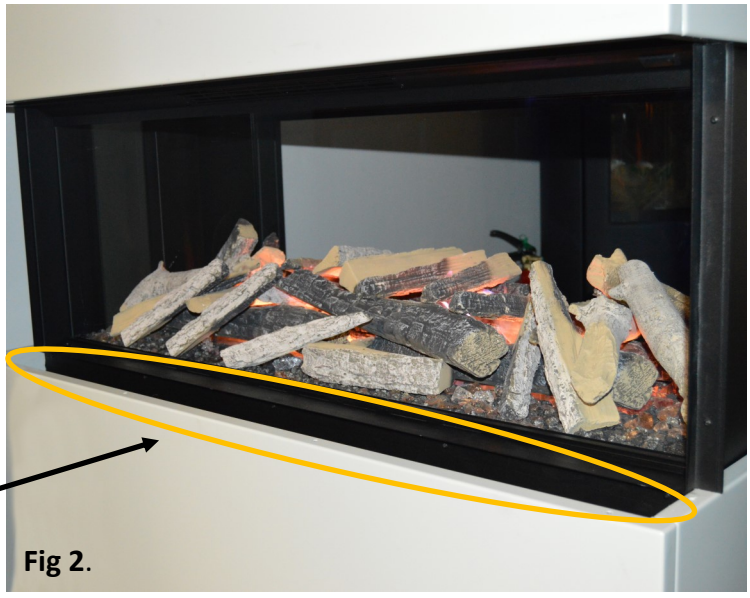

Fig 2.

Glass Removal:

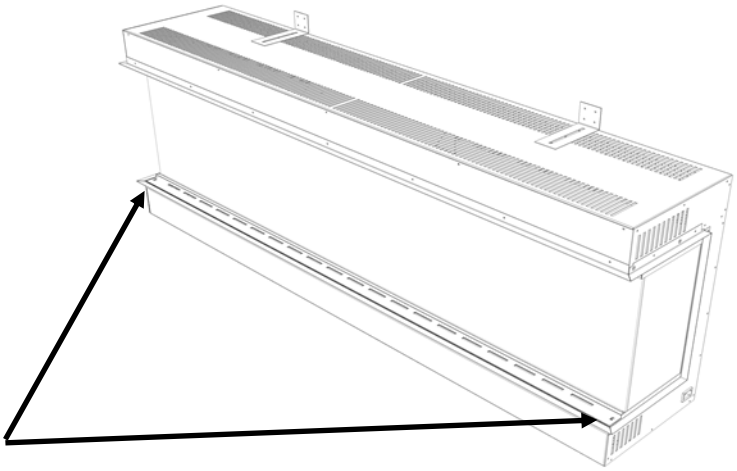

1. Remove the two screws located in the bottom glass retaining bar.

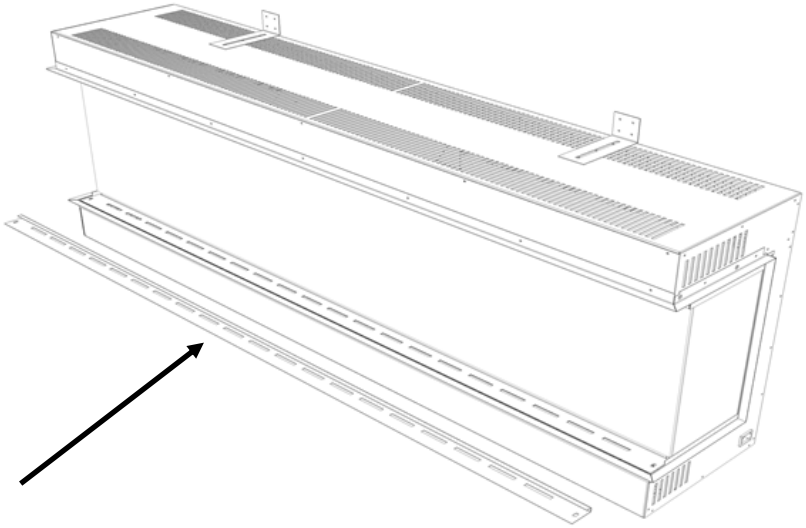

2. Remove the bottom glass retaining bar.

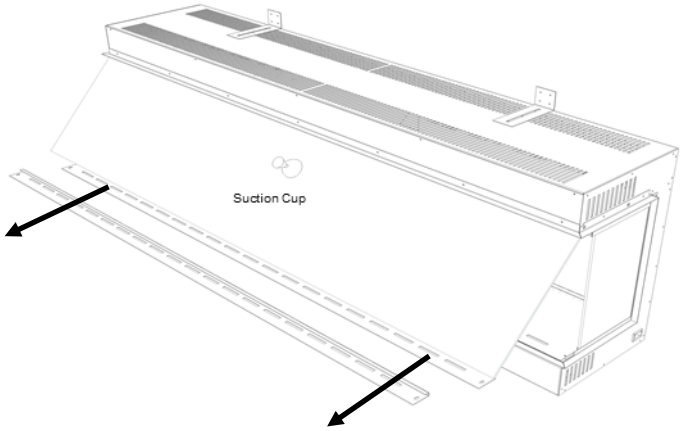

Remove the glass by pulling the second retaining bar away from the body of the fire. Ensure that the glass is supported at all times. A suction cup has been provided to aid with this step.

Please note: The suction cup is provided for support only, not to hold the full weight of the glass.

Please note: It is recommended that this step is carried out by 2 persons on Linnea models

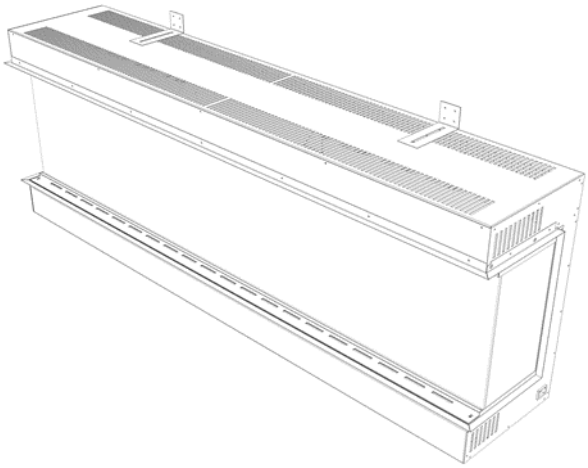

4. Place the log set as stated and replace the glass by reversing steps 3. to 1.

Side Conversion Panels

To complete this step, you must first remove front glass and side glass.

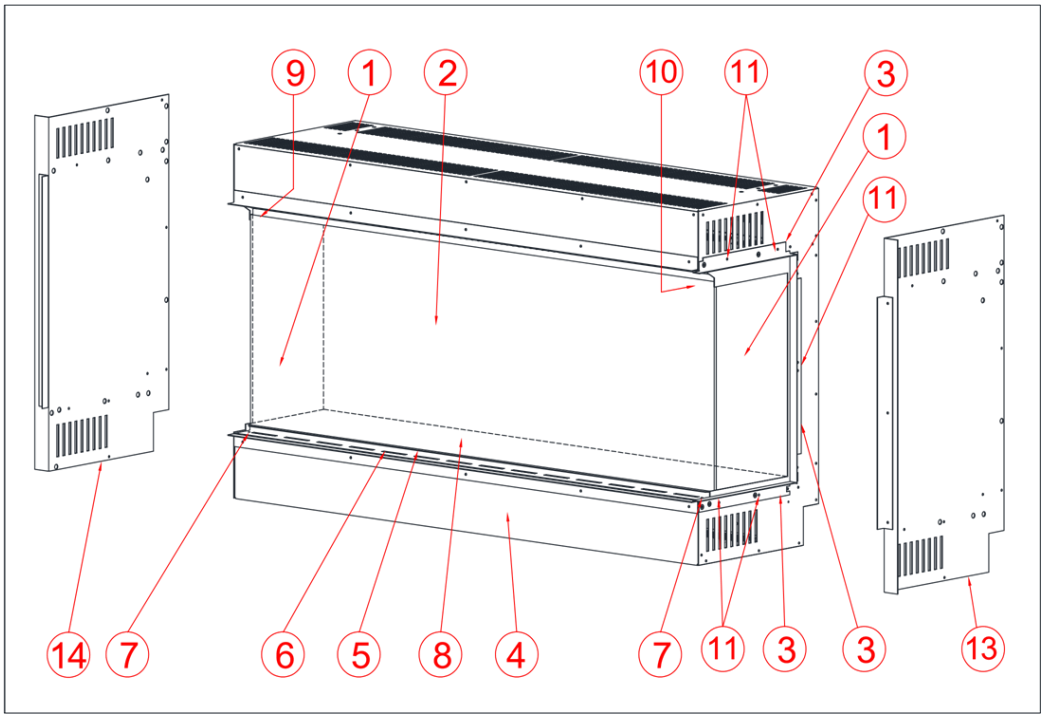

ITEM.	DESCRIPTION.	QTY.
1.	SIDE GLASS	2 OFF
2.	FRONT GLASS	1 OFF
3.	PLASTER KIT (3 OFF LEFT SIDE, 3O FF RIGHT SIDE)	6 OFF
4.	MAIN HOUSING	1 OFF
5.	FRONT GLASS BOTTOM SUPPORT	1 OFF
6.	FRONT GLASS BOTTOM RETAINER	1 OFF
7.	FRONT GLASS BOTTOM RETAINER FIXINGS	2 OFF
8.	FUEL BED	1 OFF
9.	SIDE GLASS TOP RETAINER (INTERNAL)	2 OFF
10.	SIDE GLASS TOP RETAINER (INTERNAL) FIXINGS	4 OFF
11.	PLASTER KIT FIXINGS	16 OFF
12.	IN-FILL SIDE PIECE FIXINGS	16 OFF
13.	IN-FILL RIGHT SIDE	1 OFF
14.	IN-FILL LEFT SIDE	1 OFF

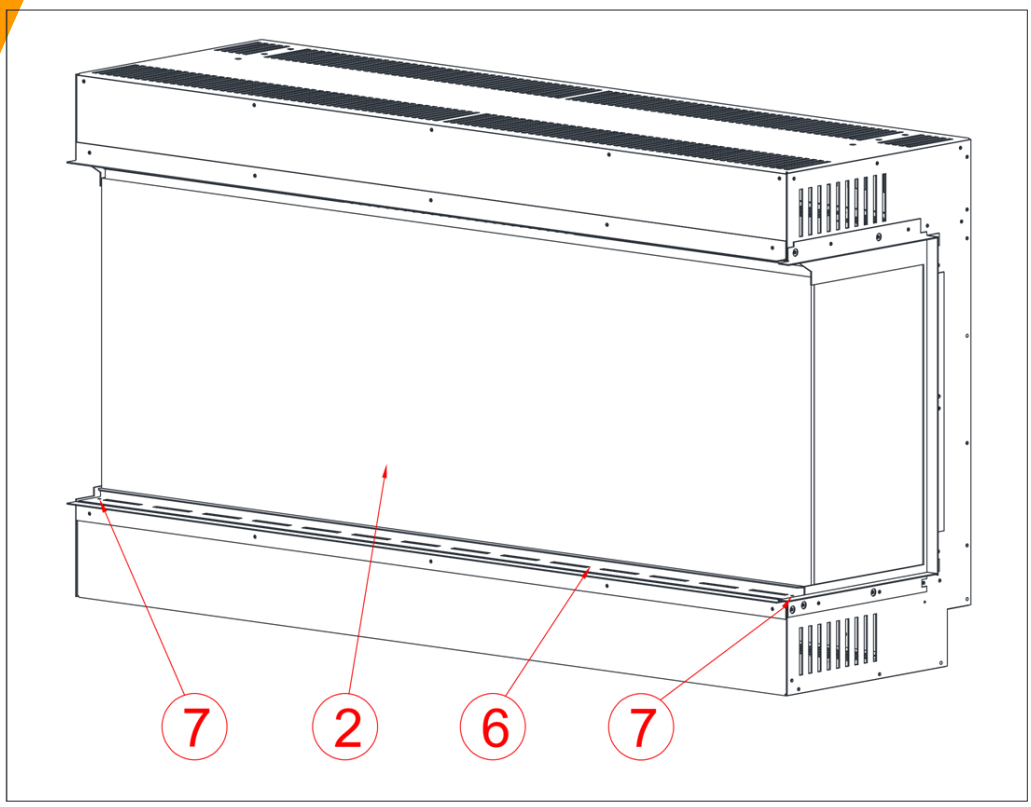

STEP 1 - REMOVAL OF FRONT GLASS (ITEM 2)

REMOVE THE 2 OFF FIXINGS (ITEM 7) THAT SECURE THE FRONT GLASS BOTTOM RETAINER (ITEM 6) TO THE FUEL BED (ITEM 8).

LIFT OFF THE FRONT GLASS RETAINER (ITEM 7) AND USING THE GLASS SUCKERS SUPPLIED (NOT SHOWN) CAEFULLY REMOVE THE FRONT GLASS (ITEM 2).

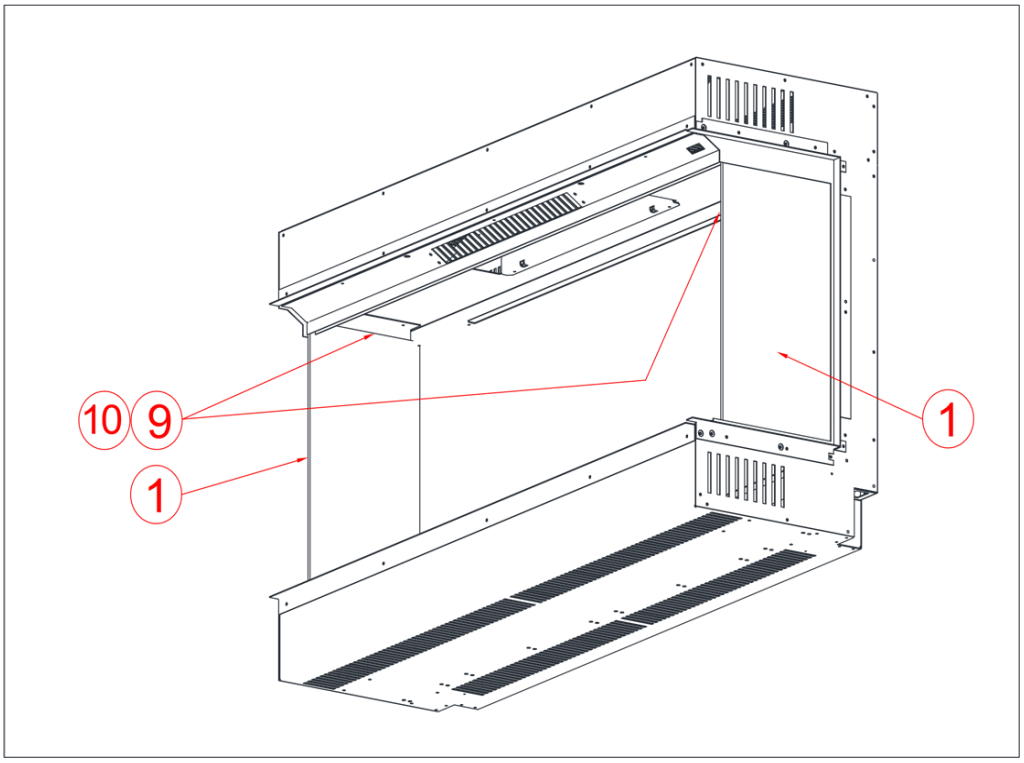

STEP 2 - REMOVAL OF SIDE GLASS (ITEM 1)

REMOVE THE 2 OFF SIDE GLASS TOP RETAINER BRACKETS (ITEM 9) BY TAKING OUT THE 4 OFF FIXINGS (ITEM 10) 2 OFF ON EACH BRACKET.

CAREFULLY TILT THE SIDE GLASS INWARDS AT THE TOP AND LIFT IT AWAY FROM UNIT.

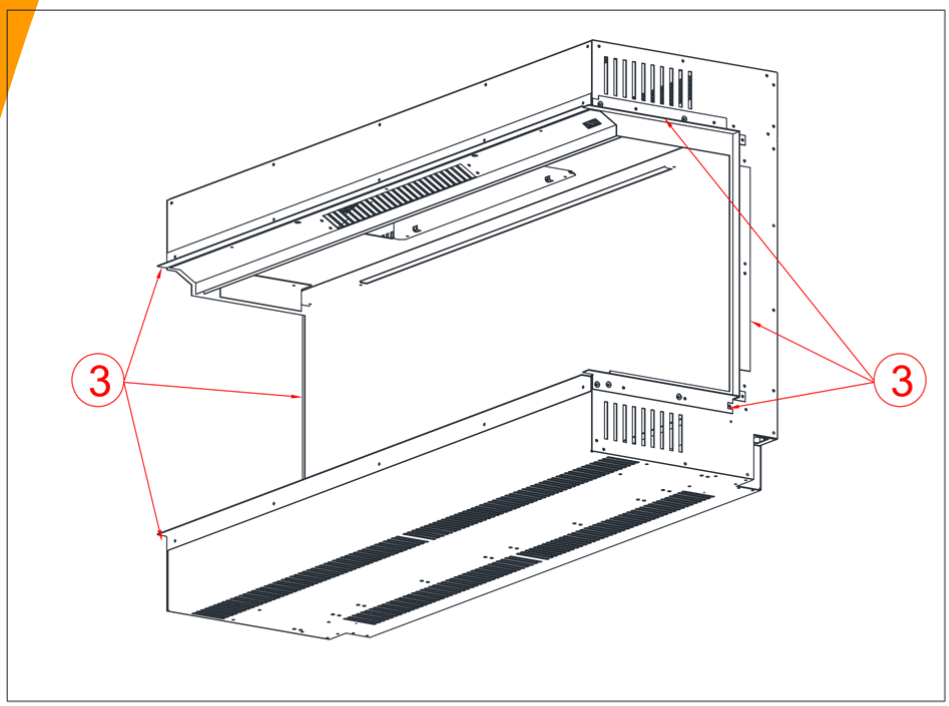

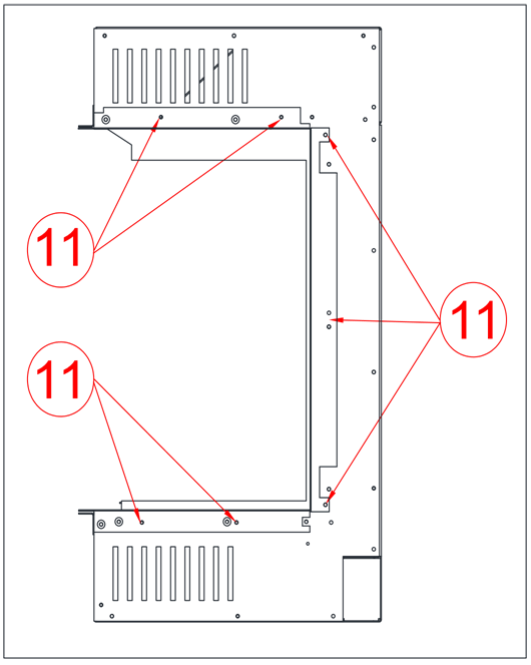

STEP 3 - REMOVAL OF PLASTER KIT (ITEM 3)

1. REMOVE THE PLASTER KIT FIXINGS (ITEM 11) USING A PHILLIPS SCREW DRIVER (NOT SUPPLIED). NOTE: ENSURE TO KEEP FIXINGS FOR FUTURE REFERENCE.
2. REMOVE THE PLASTER KIT (ITEM 3) FROM BOTH SIDES OF THE UNIT.

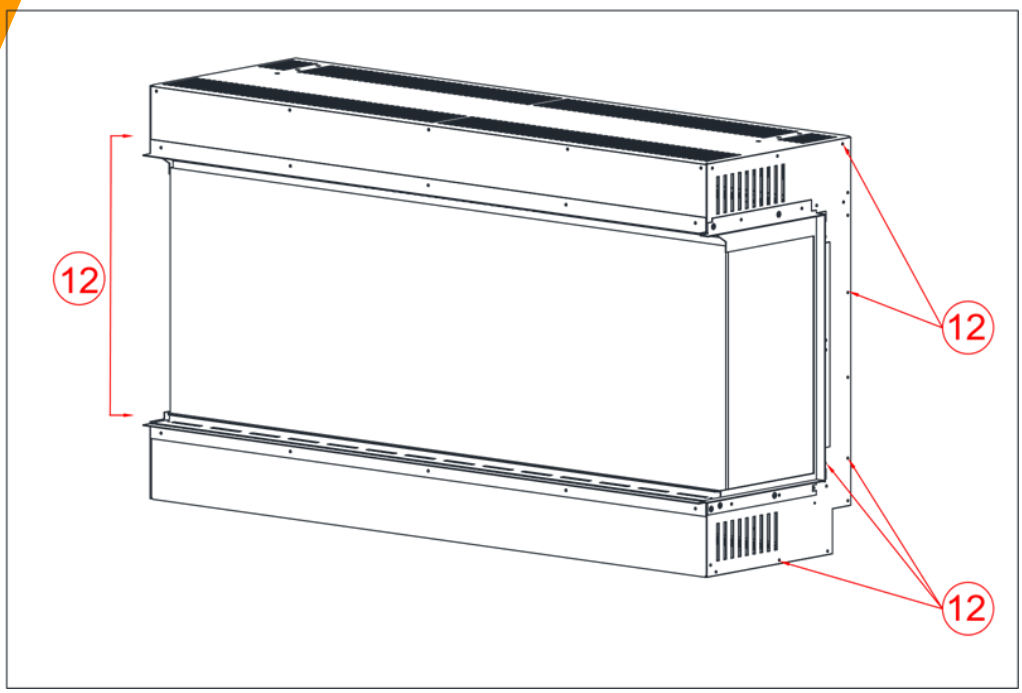

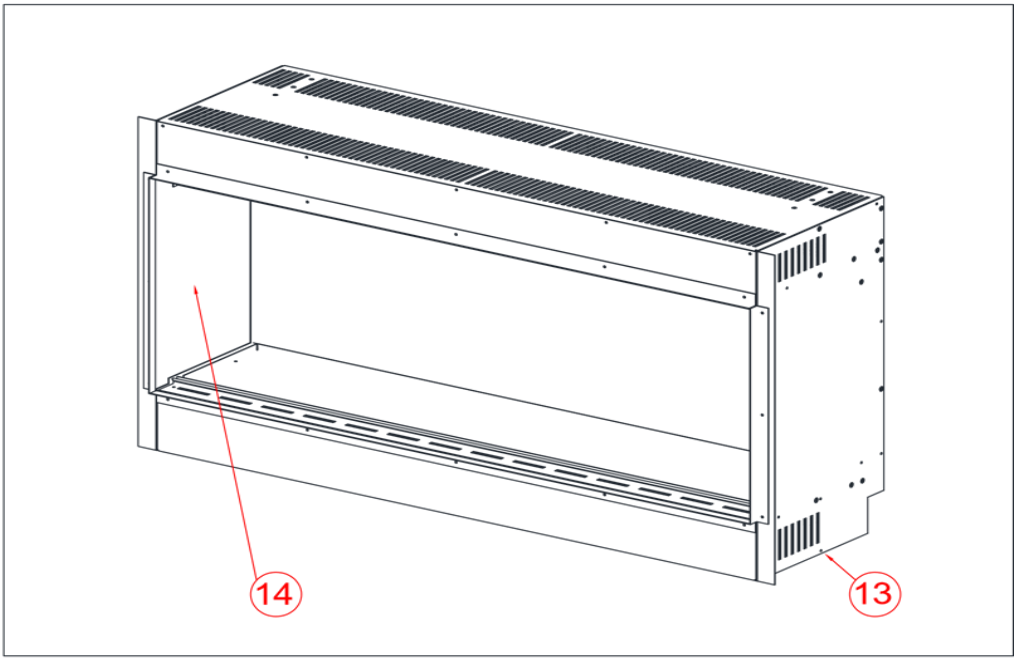

STEP 4—FITTING IN-FILL SIDES (ITEM 13 & 14)

REMOVE IN-FILL SIDE FIXINGS (ITEM 12)

PLACE THE IN-FILL SIDES OVER THE EXISTING SIDE PIECES

USING THE IN-FILL SIDE FIXINGS (ITEM 12) TOGETHER WITH THE PLASTER KIT FIXINGS (ITEM 11) THAT WERE REMOVED IN THE PREVIOUS STEP SECURE THE LEFT AND RIGHT IN-FILL SIDES (ITEM 13 & ITEM 14) TO THE UNIT.

E-Touch & App Interface:

The Appliance is operated using the E-smart App Control.

The App Control can be used on either OS or Android operating systems.

To obtain the App please visit either the OS App Store Or Google Play and follow the on screen instructions.

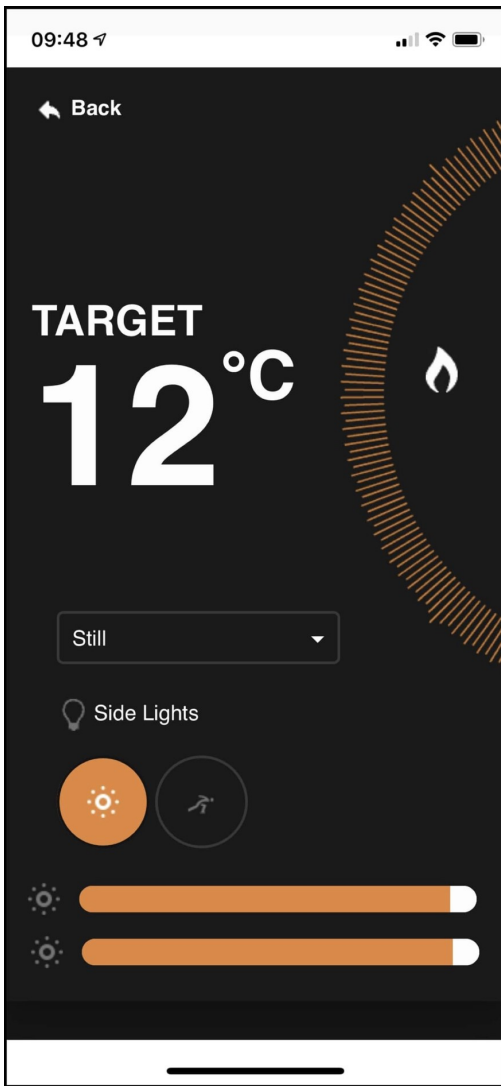

Home Screen shot taken from e-smart App

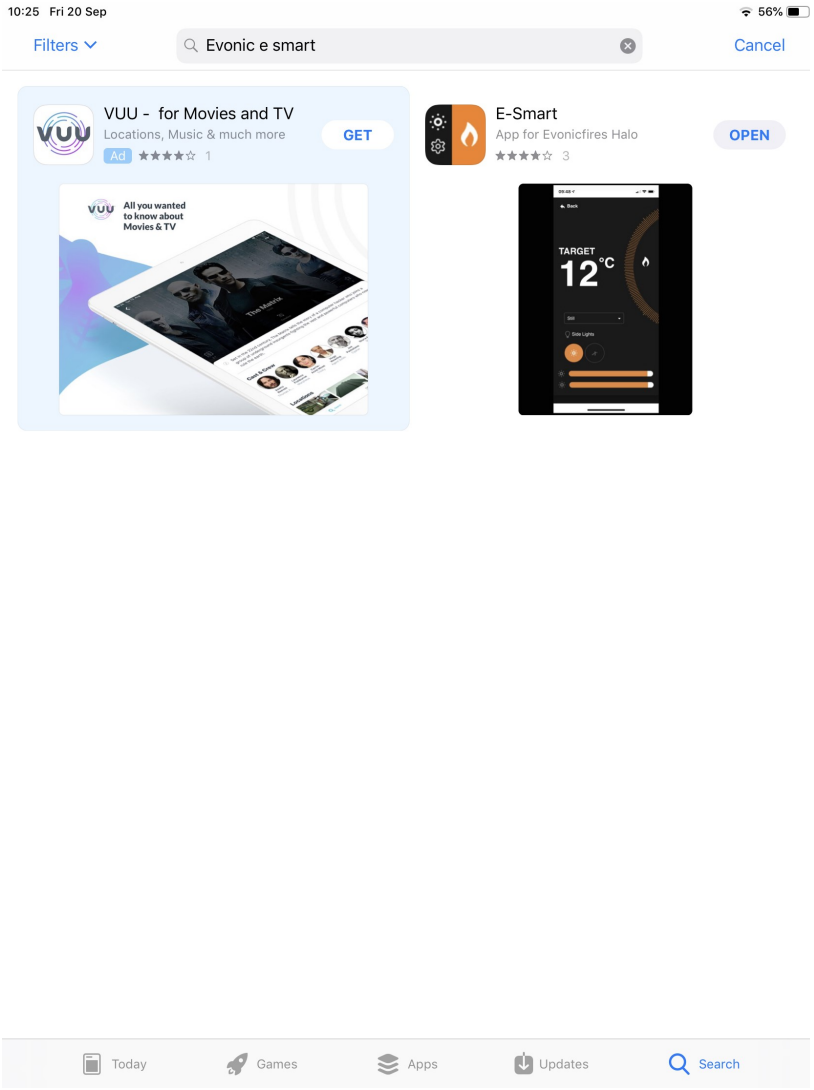

Screen shot taken from Apple App Store.

Download on the App Store

GET IT ON Google Play

Please see separate App & E-Tab instructions for full breakdown of how to use

Product Operation:

The appliance is operated by the **e-smart** App, the main standby power switch to the Halo product is located to the right of the heater outlet, which is marked with a light bulb image, to activate the product, this switch must be switch to the “ON” position.

The first time the halo product is activated both the illumination and heater will function, to switch the heater “Off” simply reduce the Room Temperature down to 10 degrees on the App control.

BUILT IN MODELS:

This product has been designed to be installed into a studwork or existing chimney breast.

Please note that any GF2 models from the Halo range are not suitable to be installed into a existing chimney breast.

Please seek advice from a professional, with reference to the structural integrity of the installation site.

If the products is to be installed into a open chimney or flue, it is important that the chimney/flue is blocked off to prevent any up/down draughts and falling debris which could restrict and alter the airflow to the product.

It is also important to ensure that the product has a minimum internal clearance directly above and below the product of 100 mm, this is to ensure that the product can circulate the required airflow for the heater unit.

The product should never be sealed into a opening with the use of silicones or adhesives as this can also alter the airflow and hinder any further servicing of the product.

Please refer to technical specification table for further information, with reference to measurements.

Heater unit cut-out) (This is a safety feature, to safe guard against further damage to the product).

If the airflow is restricted the heater will automatically turn off. This is can occur due to incorrect installation or obstruction.

To reset the heater function:

•isolate from the mains power supply.

•Leave product to cool.

•After a suitable cooling down period, remove the obstruction if obstructed, and check installation.

•After 10 minutes the thermo switch (cut-out) in the heater will reset.

Please note that both the effect fan and heater fan omit a low decibel noise, both of which are normal operating characteristics.

Troubleshooting Flow Chart:

Problem	Possible Cause	Solution
1) Flames not working correctly	Ribbons are statically connected to glass.	Spray some anti-static spray beneath the tray.
	Installation airflow restricted.	Check the correct aperture has been adhered to when installing— Recommended clearance is **100mm**.
	Blower clogged.	Fan requires cleaning out.
	Slow fan.	Fan requires cleaning out. If problem persists, replacement fan may be required.
2) Heater blowing cold	Possible installation gaps/Chimney not adequately blocked off.	Chimney may not be fully blocked. Correct aperture has not been adhered to—**100mm**
	Fan clogged.	Heater fan requires cleaning out
	Faulty element.	Replace element
	Slow fan.	Check fan placement. If problem persists replacement fan may be required.

Problem	Possible Cause	Solution
3) Noisy Heater	Fan unbalanced.	Adjust fan to stop catching on the case. If problem persists replacement fan unit maybe required.
	Fan catching on housing.	Adjust fan to stop catching on the case
	Fan clogged.	Fan requires cleaning out. If problem persists a replacement fan may be required.
	Fan has come loose.	Tighten fan cradle or screws holding fan onto fan cradle.
4) Noisy Heater	Fan unbalanced.	Adjust fan to stop catching on the case. If problem persists a replacement fan unit may be required.
	Fan catching on housing.	Adjust fan to stop catching on the case.
	Fan clogged.	Fan requires cleaning out. If problem persists a replacement fan may be required.
	Fan has come loose.	Tighten fan cradle or screws holding fan onto fan cradle.

Problem	Possible Cause	Solution
3) Noisy Heater	Fan unbalanced.	Adjust fan to stop catching on the case. If problem persists replacement fan unit maybe required.
	Fan catching on housing.	Adjust fan to stop catching on the case
	Fan clogged.	Fan requires cleaning out. If problem persists a replacement fan may be required.
	Fan has come loose.	Tighten fan cradle or screws holding fan onto fan cradle.
4) Noisy Heater	Fan unbalanced.	Adjust fan to stop catching on the case. If problem persists a replacement fan unit may be required.
	Fan catching on housing.	Adjust fan to stop catching on the case.
	Fan clogged.	Fan requires cleaning out. If problem persists a replacement fan may be required.
	Fan has come loose.	Tighten fan cradle or screws holding fan onto fan cradle.

Problem	Possible Cause	Solution
7) Heater coming on randomly	Timer has been accidentally set.	Double check timer settings.
	Thermostat faulty.	Replace PCB.
8) LED streaking	LED dropped down.	LED needs to be re-stuck into place.
	Log positioning.	Change log positioning to hide any direct view of LED strip.
9) Heater cutting out	Build up of hot air triggering heater cut-out unit.	Ensure the appliance has the required aperture for air to circulate and prevent build-up. Recommended **100mm**
10) Noisy fans	Fan has slipped off-centre of mechanism	Press red button on side of fan to re-centre to stop it from catching.

Technical Specification

Specification including Tile Wings

MODEL	HEIGHT	WIDTH	DEPTH
TYRELL	790mm	1188mm	300mm
KIRUNA	570mm	1418mm	300mm
KALMAR	609mm	1474mm	350mm
LINNEA	556mm	1914mm	300mm
LINDSTROM DS	N/A	N/A	N/A

Specification without Tile Wings

MODEL	HEIGHT	WIDTH	DEPTH
TYRELL	790mm	805mm	300mm
KIRUNA	555mm	1004mm	300mm
KALMAR	N/A	N/A	N/A
LINNEA	555mm	1506mm	300mm
LINDSTROM DS	558mm	1010mm	500mm

Conditions of warranty:

If this appliance should prove to be defective due to faulty design, materials or workmanship within 12 months of purchase, the product will be repaired free of charge, subject to the following conditions:

The electric fire shall have been purchased and used solely within the UK and Ireland for domestic purposes and in accordance with the Users operating instructions.

It is the purchasers responsibility to prove that the unit is under warranty, e.g. receipt of purchase.

All warranties, will be invalidated if unauthorised repairs or modifications are made to the electric fire, or in case of accident, misuse or damage caused by improper installation, or to damage occurring during transit to or from the repairer and altered or missing serial numbers.

Any parts, which have been replaced under this warranty, shall become our property.

The company shall not be liable for any consequential loss or damage what so ever, arising from or in connection with this electric fire.

This Warranty does not apply to Heating elements, Bulbs or fuses.

'No fault found', service calls and installation errors are not covered under the manufacturers warranty and will result in a charge being made for the Call-Out by our appointed service engineer.

This warranty is in addition to and does not affect the purchasers statutory rights of consumers.

Registering product:

To register a product please visit: **www.evonicfires.co.uk** and complete the fields required under the **Register a Product Section**. By registering your appliance, an extra 12 months will be added to your warranty.

evonicfires

quality electric fires built in britain

CK Fires Ltd / Evonic Fires

1 Evonic house, Clifford park, Clifford lane, Stratford-Upon-Avon, CV37 8HW

Tel: +44 (0) 1789 263868 Fax: +44 (0) 1789 293080

Email: sales@evonicfires.co.uk — Follow us on Twitter @evonicfires